PRELIMINARY / FINAL SITE PLAN
FOR
ACCESS SELF STORAGE

BLOCK 502.01, LOTS 45.01 & 46.01
297 & 305 DAVIDSON AVENUE
TOWNSHIP OF FRANKLIN
SOMERSET COUNTY, NEW JERSEY

CERTIFIED LIST OF PROPERTY OWNERS

BLOCK	LOT	OWNER NAME AND ADDRESS
502.02	44.04	K/S REALTY COMPANY 520 ROUTE 22 BRIDGEWATER, NJ 08807
502.01	7.01	TRAQUAIR CORPORATION PO BOX 476 SOUTH BOUND BROOK, NJ 08880
502.01	10.03	PR KC SOMERSET OWNERCO, LP PRUDENTIA 220 W. GERMANTOWN PIKE-#250 PLYMOUTH MEETING, PA 19462
502.02	10.02	PR KC SOMERSET OWNERCO, LP PRUDENTIA 220 W. GERMANTOWN PIKE-#200 PLYMOUTH MEETING, PA 19462
468.12	11.02	SHI INTERNATIONAL CORNG, PAUL 290 DAVIDSON AVENUE, STE 101 SOMERSET, NJ 08873
502.01	44.03	K/S REALTY COMPANY 520 ROUTE 22 BRIDGEWATER, NJ 08807
502.01	47.02	ROYAL SOMERSET INN LLC 28 AMBROSE VALLEY LANE PISCATAWAY, NJ 08854

RIGHT-OF-WAY DEPARTMENT
BUCKEYE PIPE LINE COMPANY
PO BOX 368
EMMAUS, PA 18049-0368

BUSINESS MANAGER
COMCAST CABLE
279 AMWELL ROAD
HILLSBOROUGH, NJ 08844

SUNOCO PIPELINE LP
RIGHT-OF-WAY DEPT.
MONTELLO COMPLEX
525 FRITZTOWN ROAD
SINKING SPRING, PA 19608

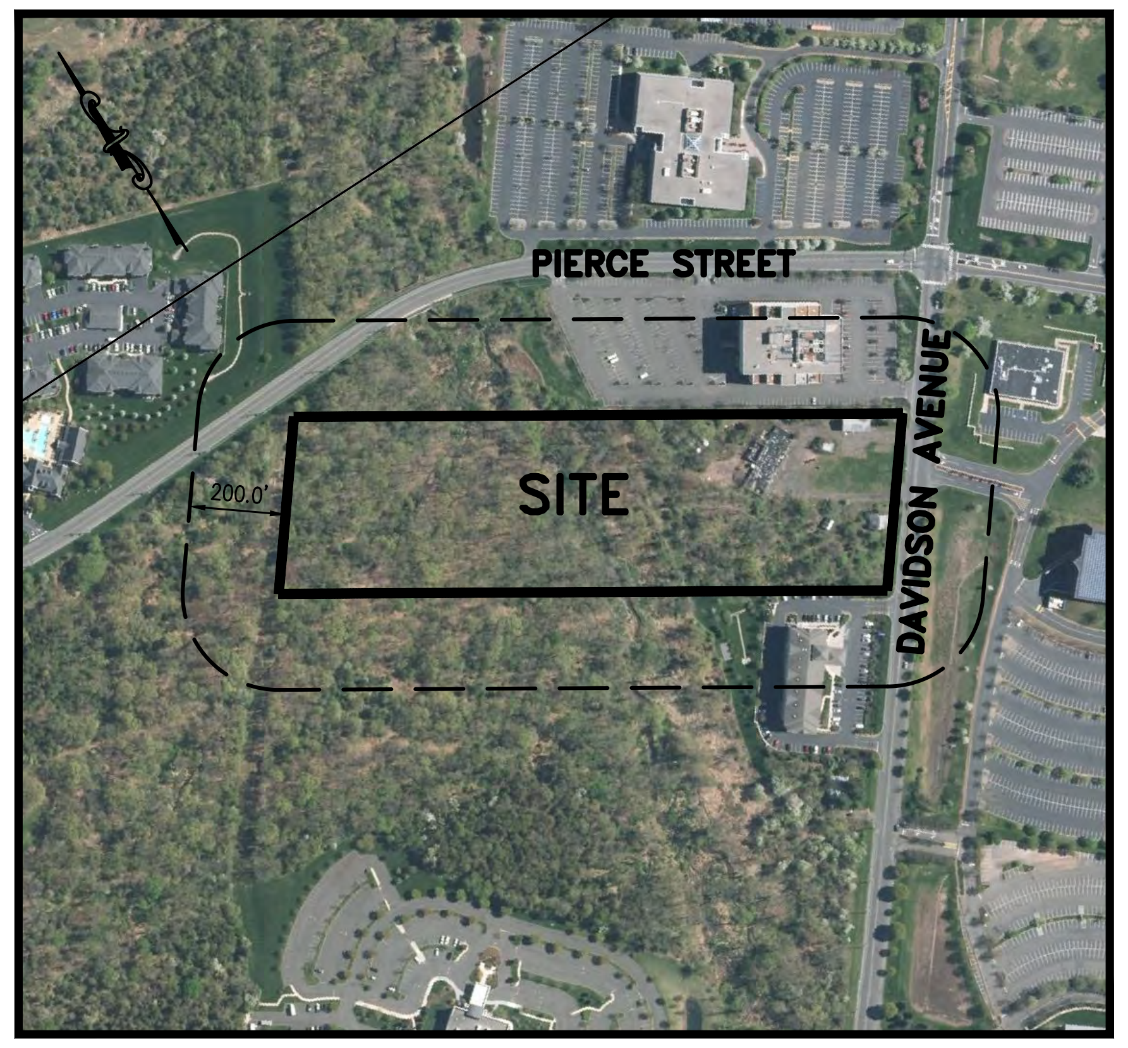

200' LOCATION MAP
SCALE: 1"=400'±

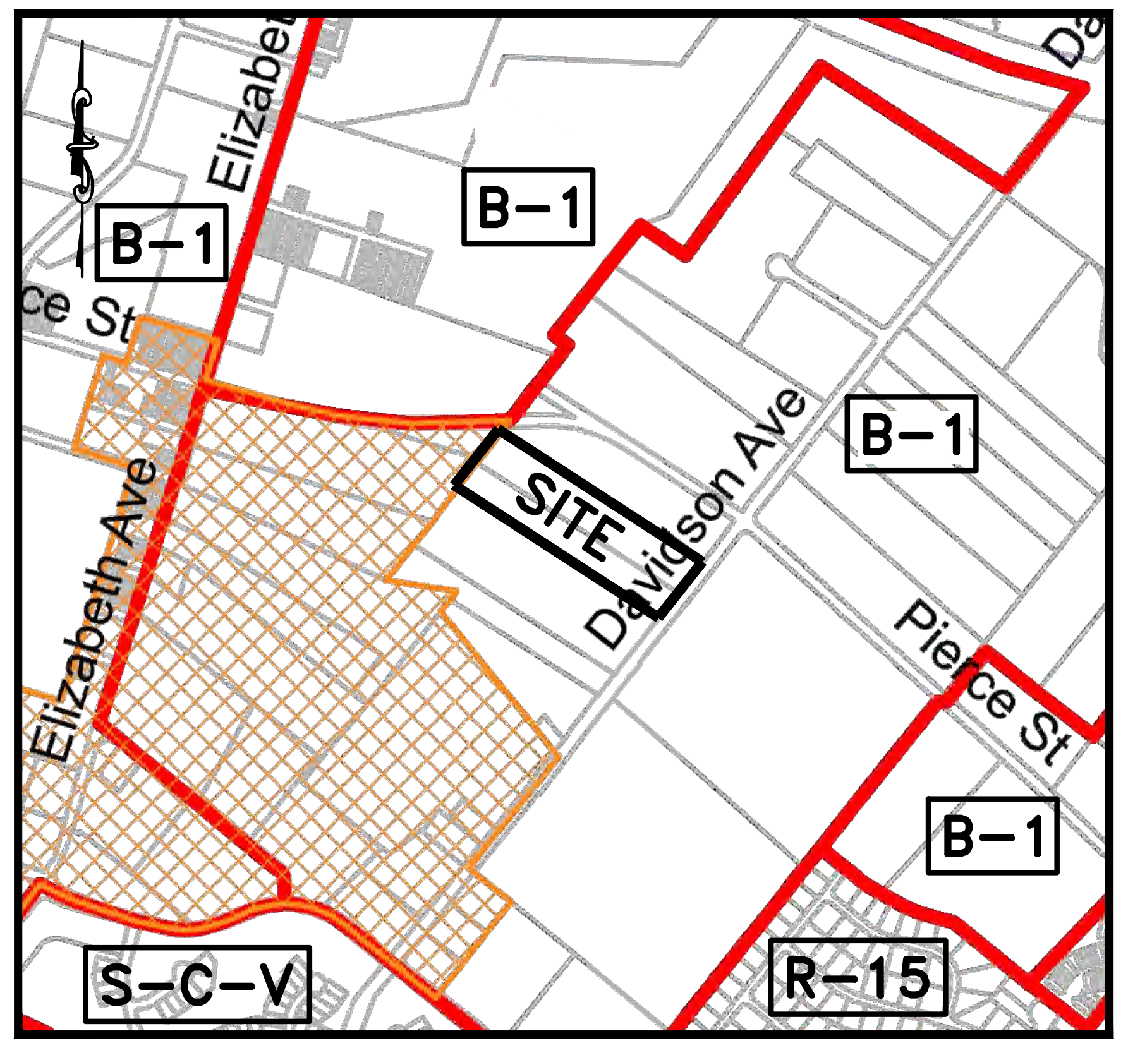

ZONE MAP
SCALE: 1"=1000'±

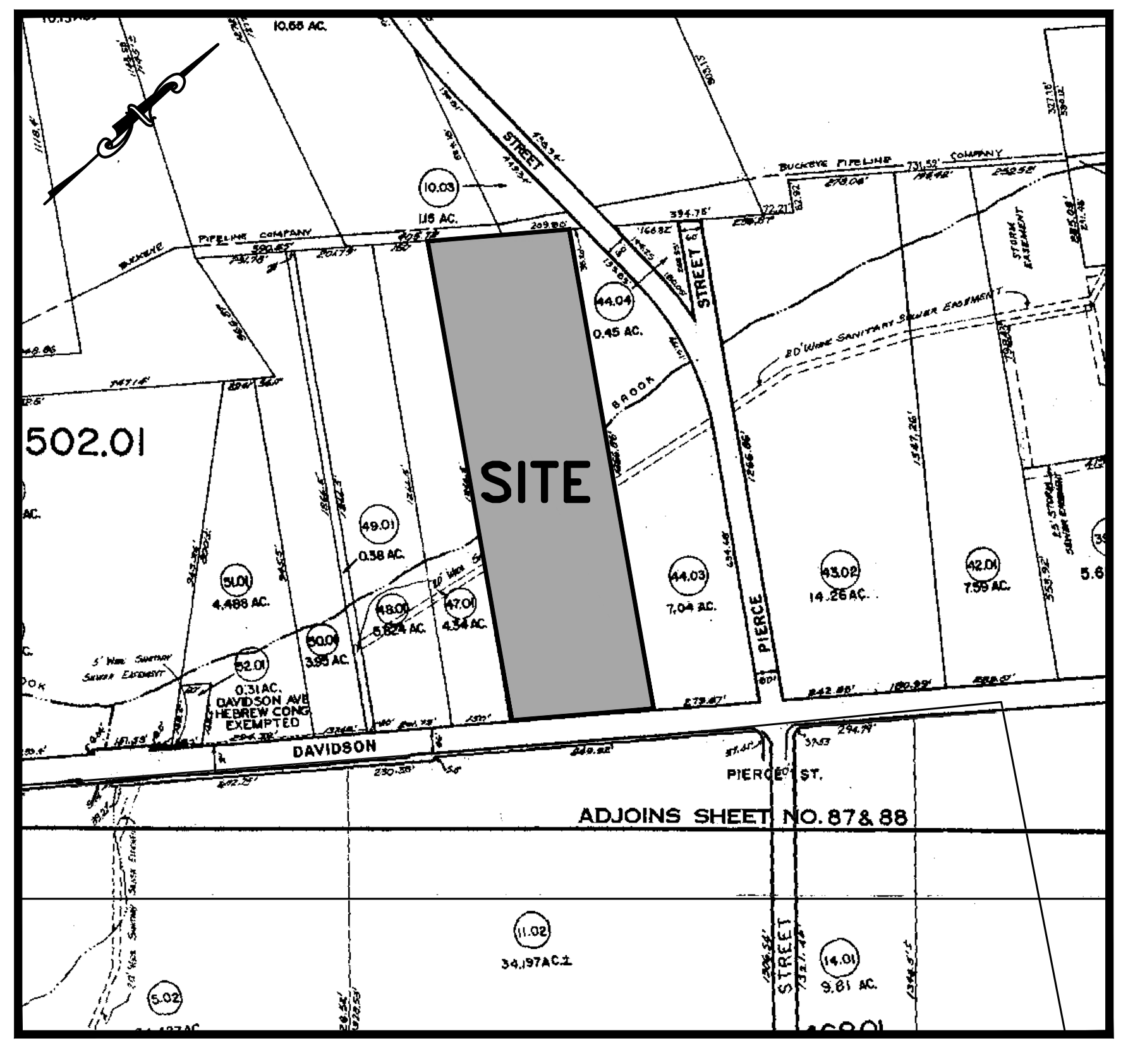

KEY MAP
SCALE: 1"=500'±
TOWNSHIP OF FRANKLIN TAX MAP SHEET NO. 89

OWNER:

FRANKLIN STORAGE, LLC
208 GATES ROAD
LITTLE FERRY, NJ 07643

APPLICANT:

FRANKLIN STORAGE, LLC
208 GATES ROAD
LITTLE FERRY, NJ 07643

ZONE DATA:

B-1 ZONE (BUSINESS & INDUSTRY)

DESCRIPTION	REQUIRED	PROPOSED
MINIMUM LOT AREA (SF)	2 AC.	10.717 AC.
MINIMUM FRONT YARD (FT.)	50	64.5
MINIMUM FRONTAGE (FT.)	150	370
MINIMUM ONE SIDE YARD (FT.)	10	54.9
MINIMUM BOTH SIDE YARDS (FT.)	50	132.5
MINIMUM REAR YARD (FT.)	25	1006.3
MINIMUM BUILDING FAR	0.5	0.25
MAXIMUM BUILDING LOT COVERAGE	50	8.6%
MAXIMUM IMPERVIOUS COVERAGE (%)	60	19.4%
MAXIMUM BUILDING HEIGHT (STORIES/FT.)	5/65	3/39'
MINIMUM PARKING SETBACK		
FRONT YARD (FT.)	50	73.9
SIDE YARD (FT.)	5	13.5
REAR YARD (FT.)	5	938.6

MINIMUM NUMBER OF PARKING SPACES
SELF STORAGE FACILITY 1 SPACE/5000 SF (x 120,750 SF) = 25 SPACES REQUIRED
6 PROVIDED (INCLUDES 1 H.C. AS REQUIRED) Ⓥ

Ⓥ VARIANCE REQUIRED

SHEET INDEX:

1	COVER SHEET
2	OVERALL SITE PLAN
3	EXISTING CONDITIONS / DEMOLITION & TREE REPLACEMENT PLAN
4	DIMENSION PLAN
5	GRADING & UTILITY PLAN
6	LANDSCAPE PLAN
7	LIGHTING PLAN
8	SOIL EROSION AND SEDIMENT CONTROL PLAN
9	SOIL EROSION AND SEDIMENT CONTROL DETAILS
10-15	CONSTRUCTION DETAILS
	FTSA STANDARD DETAILS (SHEETS 1-3)

SIGNAGE

- BUILDING MOUNTED SIGN: 100 SF MAX. PERMITTED: 100 SF PROPOSED

FREESTANDING SIGN: 100 SF MAX. PERMITTED: 97.7 SF PROPOSED
MINIMUM SETBACK = 10 FT, 10 FT. PROPOSED

SOMERSET COUNTY
ACCEPTANCE STAMP

THESE PLANS ARE NOT ACCEPTED FOR CONSTRUCTION UNLESS THIS BLOCK IS STAMPED "ACCEPTED AS SUBMITTED" BY A STAFF MEMBER OF THE SOMERSET COUNTY ENGINEERING DIVISION. BIDS FOR CONSTRUCTION SHOULD NOT BE BASED ON THESE PLANS UNTIL THE PLANS ARE ACCEPTED BY THE COUNTY.

ACCEPTANCE OF THESE PLANS EXPIRES TWO (2) YEARS FROM THE STAMPED DATE

PROTECT YOURSELF
A PHONE CALL CAN BE YOUR INSURANCE POLICY
STOP - CALL BEFORE YOU DIG! GARDEN STATE UNDERGROUND LOCATION
1 - 800 - 272 - 1000
THE STATE OF NEW JERSEY REQUIRES NOTIFICATION OF EXCAVATORS, DESIGNERS, OR ANY PERSON PREPARING TO DISTURB THE EARTH'S SURFACE ANYWHERE IN THE STATE.

J:\ENGINEERING PROJECTS\2021\21-010 - 297 DAVIDSON AVE_CAD\DESIGN\21-010 COVER (R2).DWG-(1/25/22)

revisions

no.	date	description
1	10/12/21	PER SCD & TWP COMMENTS/NJDEP PERMIT PLAN
2	01/17/22	PER DEP, DRCC & COUNTY COMMENTS

Engineers
Landscape Architects
Land Surveyors
Planners
575 Route 28, Suite 110
Raritan, N.J. 08869
908-722-1500
Fax 908-722-7035
www.reynoldsgrp.com

The Reynolds Group Inc.

State of New Jersey
Certificate of Authorization
Number 24GA27969200
21MH00004300

F. Mitchel Ardman, P.E., P.P.
Jeffrey D. Reynolds, P.L.A.

F Mitchel Ardman
F. MITCHEL ARDMAN
N.J. PROFESSIONAL ENGINEER LIC. NO. 34317

project
ACCESS SELF STORAGE

BLOCK 502.01, LOTS 45.01 & 46.01
297 & 305 DAVIDSON AVENUE
TOWNSHIP OF FRANKLIN
SOMERSET COUNTY, NEW JERSEY

drawing title
COVER SHEET

job number 21-010	drawing number 1
scale AS SHOWN	
checked by FMA	
drawn by GH	
date 08/31/2021	sheet 1 of 15

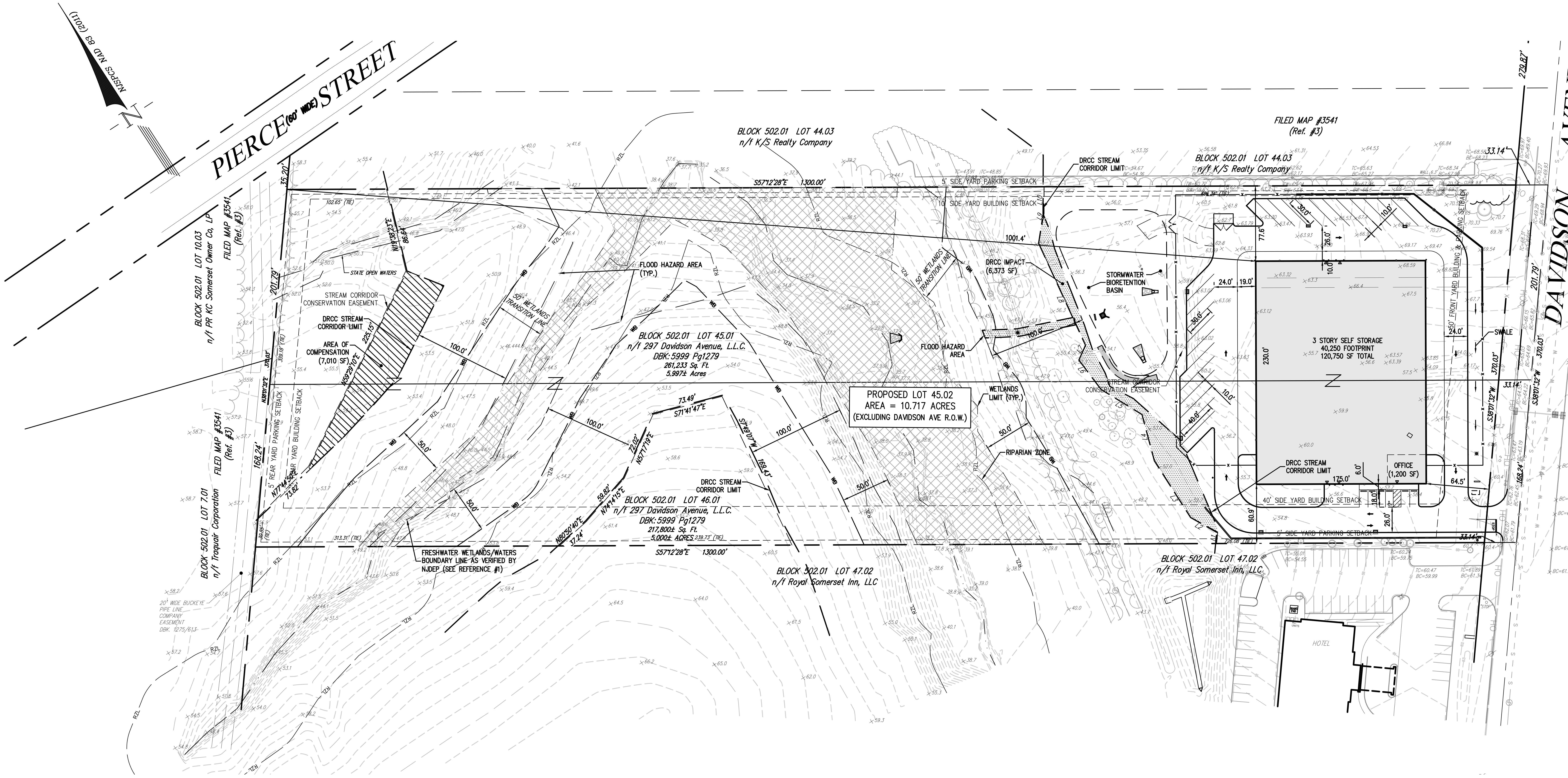
NJSPCS NAD 83 (2011)
N
PIERCE (60' WIDE) STREET
DAVIDSON AVENUE
BLOCK 502.01 LOT 44.03
n/f K/S Realty Company
FILED MAP #3541
(Ref. #3)
BLOCK 502.01 LOT 10.03
n/f PR KC Somerset Owner Co, LP
BLOCK 502.01 LOT 7.01
n/f Traquair Corporation
20' WIDE BUCKEYE PIPE LINE COMPANY EASEMENT DBK. 1275/613
BLOCK 502.01 LOT 45.01
n/f 297 Davidson Avenue, L.L.C.
DBK:5999 Pg1279
261,233 Sq. Ft.
5.997± Acres
BLOCK 502.01 LOT 46.01
n/f 297 Davidson Avenue, L.L.C.
DBK:5999 Pg1279
217,800± Sq. Ft.
5.000± ACRES
BLOCK 502.01 LOT 47.02
n/f Royal Somerset Inn, LLC
PROPOSED LOT 45.02
AREA = 10.717 ACRES
(EXCLUDING DAVIDSON AVE R.O.W.)
3 STORY SELF STORAGE
40,250 FOOTPRINT
120,750 SF TOTAL
OFFICE
(1,200 SF)
STORMWATER BIORETENTION BASIN
DRCC IMPACT
(6,373 SF)
DRCC STREAM CORRIDOR LIMIT
STREAM CORRIDOR CONSERVATION EASEMENT
AREA OF COMPENSATION
(7,010 SF)
STATE OPEN WATERS
FLOOD HAZARD AREA
(TYP.)
50' WETLANDS TRANSITION LINE
WETLANDS LIMIT (TYP.)
RIPARIAN ZONE
SWALE
FRESHWATER WETLANDS/WATERS BOUNDARY LINE AS VERIFIED BY NJDEP (SEE REFERENCE #1)
5' SIDE YARD PARKING SETBACK
10' SIDE YARD BUILDING SETBACK
40' SIDE YARD BUILDING SETBACK
50' FRONT YARD BUILDING & PARKING SETBACK
5' REAR YARD PARKING SETBACK
REAR YARD BUILDING SETBACK
S57°12'28"E 1300.00'
N38°01'32"E
S38°01'32"W 370.03'
201.79'
168.24'
279.87'
33.14'
1001.4'
100.0'
50.0'
230.0'
175.0'
HOTEL

Line Table		
Line #	Direction	Length
L1	N38° 30' 15"E	11.91
L2	N28° 28' 26"W	31.58
L3	N00° 21' 28"E	69.25
L4	N17° 56' 53"E	49.52
L5	N25° 26' 36"W	49.51
L6	N04° 08' 52"W	37.84
L7	N56° 58' 05"E	16.68
L8	N08° 06' 15"E	92.48
L9	N43° 06' 31"E	31.01
L10	N33° 09' 39"E	27.76

LEGEND

— · — · —	CENTERLINE OF STREAM
— — —	FLOOD HAZARD AREA
—— RZL ——	RIPARIAN ZONE
— — —	DRCC STREAM CORRIDOR LIMIT
- - - -	WETLANDS LINE
—— WB ——	50' WETLANDS TRANSITION LINE
▨	WETLANDS
▨	AREA OF COMPENSATION WITHIN DRCC STREAM CORRIDOR
░	DRCC STREAM CORRIDOR IMPACT

REFERENCE:

1. THIS PLAN IS BASED UPON A MAP ENTITLED "WETLANDS PLAN 297 DAVIDSON AVENUE" PREPARED BY BASE ENGINEERING INC., REVISED 07/30/2018. FRESHWATER WETLANDS LETTER OF INTERPRETATION: LINE VERIFICATION FILE NO.:1808-03-0015.1
2. THIS PLAN IS BASED UPON A MAP ENTITLED "BOUNDARY & TOPOGRAPHIC SURVEY of BLOCK 502.01, LOTS 45.01 & 46.01" PREPARED BY THE REYNOLDS GROUP INC., DATED 03/25/2021.
3. THIS PLAN IS BASED UPON MAPS ENTITLED "FLOOD PLAIN PLANS 1 & 2, 297 DAVIDSON AVENUE" PREPARED BY BENCHMARK CIVIL ENGINEERING SERVICES, INC., REVISED 06/25/2018.
4. A PORTION OF THIS SITE LIES IN A FLOOD HAZARD AND/OR RIPARIAN ZONE. CERTAIN ACTIVITIES MAY BE REGULATED BY THE NJDEP. FLOOD HAZARD AREA VERIFICATION FILE NO. 1808-03-0015.1 FHA 180001.

GRAPHIC SCALE

60 0 30 60 120 240

(IN FEET)
1 inch = 60 ft.

PROTECT YOURSELF
A PHONE CALL CAN BE YOUR INSURANCE POLICY

STOP - CALL BEFORE YOU DIG! GARDEN STATE UNDERGROUND LOCATION
1 - 800 - 272 - 1000

THE STATE OF NEW JERSEY REQUIRES NOTIFICATION OF EXCAVATORS, DESIGNERS, OR ANY PERSON PREPARING TO DISTURB THE EARTH'S SURFACE ANYWHERE IN THE STATE.

revisions		
no.	date	description
1	10/12/21	PER SCD & TWP COMMENTS/NJDEP PERMIT PLAN
2	01/17/22	PER DEP, DRCC & COUNTY COMMENTS

LEGEND

G⋈	GAS VALVE
Ⓖ	GAS METER
W⋈	WATER VALVE
⚲	HYDRANT
Ⓦ	WATER METER
CS⊕	CURB STOP
FDC	FIRE DEPT. CONNECTION
Ⓓ	DRAINAGE MH
▬	CURB INLET
■	LAWN INLET
Ⓢ	SANITARY MH
CO○	CLEANOUT
○	BOLLARD
○	SIGN
☼	LIGHT
◙	MAIL BOX
—○	GUY WIRE
—⊖—	UTILITY POLE
Ⓔ	ELECTRIC MH
⊙	CONIFEROUS TREE
⊙	DECIDUOUS TREE
— X —	FENCE
—○—○—	RAILING
═══	WALL
◉	GATE POST
— W —	WATER LINE
— G —	GAS LINE
— E —	ELECTRIC LINE
— S —	SANITARY LINE
—OH—	OVERHEAD WIRES
▽	DOOR LOCATION

Engineers
Landscape Architects
Land Surveyors
Planners

575 Route 28, Suite 110
Raritan, N.J. 08869
908-722-1500
Fax 908-722-7035
www.reynoldsgrp.com

The Reynolds Group Inc.

State of New Jersey
Certificate of Authorization
Number 24GA27969200
21MH00004300

F. Mitchel Ardman, P.E., P.P.
Jeffrey D. Reynolds, P.L.A.

F Mitchel Ardman
F. MITCHEL ARDMAN
N.J. PROFESSIONAL ENGINEER LIC. NO. 34317

project

ACCESS SELF STORAGE

BLOCK 502.01, LOTS 45.01 & 46.01
297 & 305 DAVIDSON AVENUE
TOWNSHIP OF FRANKLIN
SOMERSET COUNTY, NEW JERSEY

drawing title

OVERALL SITE PLAN

job number 21-010	drawing number 2
scale 1"=60'	
checked by FMA	
drawn by GH	
date 08/31/2021	sheet 2 of 15

J:\ENGINEERING PROJECTS\2021\21-010 - 297 DAVIDSON AVE_CAD\DESIGN\21-010 BASEMAP (R2).DWG-(1/25/22)

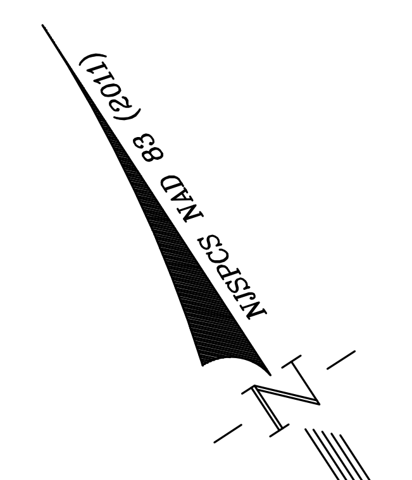
N
NJSPCS NAD 83 (2011)

TREES TO REMAIN AND TO BE REMOVED

TREES GREATER THAN 4" CALIPER LESS THAN 16" CALIPER

TOTAL	TREE	REMOVAL
1	10" APPLE	0
1	4" ARBORVITAE	1
1	6" ARBORVITAE	0
7	8" ARBORVITAE	3
3	6" CEDAR	2
4	8" CEDAR	3
2	10" CEDAR	2
3	12" CEDAR	3
6	6" CHERRY	6
4	8" CHERRY	1
6	10" CHERRY	5
4	12" CHERRY	2
1	14" CHERRY	1
1	8" HICKORY	0
2	10" HICKORY	0
2	14" HICKORY	0
1	12" LOCUST	0
1	14" LOCUST	0
2	6" MAPLE	2
1	8" MAPLE	0
1	10" MAPLE	1
3	12" MAPLE	3
2	14" MAPLE	2
1	6" MULBERRY	1
1	8" MULBERRY	1
2	10" MULBERRY	1
1	12" MULBERRY	1
14	6" OAK	10
11	8" OAK	9
9	10" OAK	5
11	12" OAK	8
1	14" OAK	1
1	6" OLIVE	1
3	6" PEAR	3
2	8" PEAR	2
1	10" PEAR	1
5	4" SPRUCE	5
1	14" SPRUCE	0

TREES EQUAL TO OR GREATER THAN 16" CALIPER

TOTAL	TREE	REMOVAL
1	24" HICKORY	0
1	16" LOCUST	0
1	20" LOCUST	1
1	30" MAPLE	1
2	16" OAK	2
3	18" OAK	2
3	20" OAK	2

THIS DATA WAS USED FOR TREE REPLACEMENT CALCULATION. (THIS SHEET)

222–5.1 TREE REPLACEMENT REQUIREMENTS

1. FOR TREES WITH A D.B.H. EQUAL TO OR GREATER THAN FOUR (4) INCHES AND LESS THAN SIXTEEN (16) INCHES, REPLACEMENT SHALL BE BASED UPON THE PERCENTAGE OF THE TREES REMOVED.
   THE SITE CONTAINS 9.28 ACRES OF WOODED AREA, 1.95 ACRES (21%) IS PROPOSED TO BE CLEARED.
   FOR TREE REMOVAL GREATER THAN 20%, (LESS THAN 40%) 20% OF TREES SHALL BE REPLACED.

   123 x 20% = 25 TREES

2. FOR TREES WITH A D.B.H. EQUAL TO OR GREATER THAN SIXTEEN (16) INCHES, THE REMOVED TREE SHALL BE REPLACED BY THE FOLLOWING:

EXISTING TREE TO BE REMOVED (DBH)	# OF TREES		NUMBER OF REPLACEMENT TREES
16" AND ≤18"	2	X 3 =	6
>18" AND ≤21"	9	X 4 =	36
>21" AND ≤24"	0	X 5 =	0
>24" AND ≤27"	0	X 6 =	0
>27" AND ≤29"	0	X 7 =	0
>29" AND ≤31"	1	X 8 =	8
>31" AND ≤33"	0	X 9 =	0
>33" AND ≤35"	0	X 10 =	0
>35" AND ≤37"	0	X 11 =	0
>37" AND ≤39"	0	X 12 =	0
>39" AND ≤40"	0	X 13 =	0
>40" AND ≤41"	0	X 14 =	0
>41"	0	X 15 =	0
			50 TOTAL INDIVIDUAL

3. LANDSCAPING SHALL INCLUDE ONE TREE FOR EACH 2000 SQUARE FEET OF PAVED AREA
   49,554 SF OF PROPOSED PAVEMENT
   49,554/2000 = 24.77 OR 25 REQUIRED TREES

   SUMMARY
   25 (PERCENTAGE OF SMALL TREES)
   50 (INDIVIDUAL LARGE TREES)
   25 (PAVEMENT REQUIRED TREES)

   100 TOTAL REPLACEMENT TREES REQUIRED

17 SHADE + 15 EVERGREEN + 8 ORNAMENTAL = 40 REPLACEMENT TREES PROVIDED (SEE LANDSCAPE PLAN SHEET #6)

100 – 40 = 60 TREES DEFICIENT
(TREE FUND CONTRIBUTION)

DEMOLITION NOTES:

1. A PERMIT IS REQUIRED TO BE OBTAINED BY THE CONTRACTOR FROM THE OFFICE OF THE MUNICIPAL ENGINEER PRIOR TO BEGINNING ANY WORK.
2. CONDUCT SELECTIVE DEMOLITION OPERATIONS AND DEBRIS REMOVAL IN A MANNER TO INSURE MINIMUM INTERFERENCE WITH ROADS, STREETS, WALKS AND OTHER ADJACENT OCCUPIED OR USED FACILITIES. DO NOT CLOSE, BLOCK OR OTHERWISE OBSTRUCT STREET, WALKS OR OTHER OCCUPIED OR USED FACILITIES WITHOUT WRITTEN PERMISSION FROM AUTHORITIES HAVING JURISDICTION. PROVIDE ALTERNATE ROUTES AROUND CLOSED OR OBSTRUCTED TRAFFIC WAYS IF REQUIRED BY GOVERNING AUTHORITIES.
3. THE CONTRACTOR SHALL BE RESPONSIBLE FOR MAINTAINING ALL CONTROL POINTS AND BENCH MARKS NECESSARY FOR THE SITE WORK.
4. PROVIDE TEMPORARY BARRICADES AND OTHER FORMS OF PROTECTION AS REQUIRED TO PROTECT OWNER'S PERSONNEL AND GENERAL PUBLIC FROM INJURY DUE TO SELECTIVE DEMOLITION WORK.
5. PROVIDE PROTECTIVE MEASURES AS REQUIRED TO PROVIDE FREE AND SAFE PASSAGE OF OWNER'S PERSONNEL AND GENERAL PUBLIC AROUND CONSTRUCTION SITE.
6. TEMPORARY 6' HIGH CHAIN LINK FENCE TO BE PROVIDED AROUND WORK AREA FOR EACH PHASE OF CONSTRUCTION/DEMOLITION, AS DIRECTED.
7. PROVIDE INTERIOR AND EXTERIOR SHORING, BRACING, OR SUPPORT TO PREVENT UNWANTED MOVEMENT, SETTLEMENT, OR COLLAPSE OF ELEMENT TO BE DEMOLISHED, AS WELL AS FOR THE PROTECTION OF ADJACENT FACILITIES OR WORK TO REMAIN.
8. REMOVE PROTECTIONS AT COMPLETION OF PROJECT OR AT AN APPROPRIATE TIME PRIOR.
9. PROMPTLY REPAIR DAMAGES CAUSED TO ADJACENT FACILITIES BY DEMOLITION WORK AT NO COST TO OWNER.
10. MAINTAIN EXISTING UTILITIES INDICATED TO REMAIN, KEEP IN SERVICE, AND PROTECT AGAINST DAMAGE DURING DEMOLITION OPERATIONS.
11. WHEN WARRANTED, CUT AND CAP EXISTING BUILDING SERVICE UTILITIES AT CURB LINE PER UTILITY COMPANY REQUIREMENTS.
12. EXISTING SITE PAVEMENT TO BE REMOVED AS NOTED ON PLAN. PRIOR TO REMOVAL, PAVEMENT TO BE SAWCUT.
13. ALL SITE AMENITIES INCLUDING SIGNS, POSTS, CONCRETE, LIGHT POLES AND LANDSCAPING WITHIN THE WORK AREA SHALL BE REMOVED UNLESS SPECIFICALLY NOTED TO REMAIN.
14. EXCAVATIONS WITHIN CLOSE PROXIMITY TO UNDERGROUND FACILITIES OR UTILITY POLES WILL REQUIRE PROTECTION IN AN APPROVED MANNER TO PREVENT DAMAGE OR INTERRUPTION OF SERVICE TO UNDERGROUND FACILITIES. THE COST TO PROVIDE THIS PROTECTION WILL BE BORNE BY THE CONTRACTOR.
15. ALL EXCAVATED MATERIAL WHICH IS UNSUITABLE FOR BACKFILL SHALL BE REMOVED FROM SITE AND PROPERLY AND LEGALLY DISPOSED OF BY THE CONTRACTOR. THE CONTRACTOR SHALL ASSUME ALL RESPONSIBILITY FOR PROPER DISPOSAL OF THIS MATERIAL.
16. CONTRACTOR SHALL COORDINATE THE STORAGE OF SALVAGED MATERIALS WITH THE OWNER.
17. BURIED FOUNDATIONS, IF ENCOUNTERED, ARE THE RESPONSIBILITY OF THE CONTRACTOR AND SHALL BE REMOVED TO 18 INCHES BELOW FINAL GRADE, OR PER SPECIFICATIONS.
18. THE REYNOLDS GROUP INC. IS NOT RESPONSIBLE FOR THE SPECIFICATIONS FOR THE REMOVAL OF ANY CONTAMINATED SOIL ENCOUNTERED DURING EXCAVATION.
19. USE WATER SPRINKLING AND OTHER SUITABLE METHODS TO LIMIT DUST AND DIRT RISING AND SCATTERING AIR TO LOWEST PRACTICAL LEVEL. COMPLY WITH GOVERNING REGULATIONS PERTAINING TO ENVIRONMENTAL PROTECTION. DO NOT USE WATER WHEN IT MAY CREATE HAZARDOUS OR OBJECTIONABLE CONDITIONS SUCH AS ICE, FLOODING, AND POLLUTION.
20. IT IS THE INTENT TO SAVE AS MANY TREES AS POSSIBLE. THE CONSTRUCTION ACTIVITIES SHALL BE CONDUCTED IN SUCH A MANNER SO AS TO MINIMIZE ADVERSE IMPACTS ON EXISTING TREES.
21. THE CONTRACTOR IS RESPONSIBLE FOR ESTABLISHING THE TREE PROTECTION ZONE (TPZ) WHICH IS AN AREA RADIAL TO THE TRUNK OF A TREE IN WHICH NO CONSTRUCTION ACTIVITY SHALL OCCUR. THE "TREE PROTECTION ZONE" SHALL BE FIFTEEN (15) FEET FROM THE TRUNK OF THE TREE TO BE RETAINED OR THE DISTANCE TO THE DRIPLINE, WHICHEVER IS GREATER.
22. A FORTY–EIGHT–INCH–HIGH WOODEN SNOWFENCE MOUNTED ON STEEL POSTS, LOCATED EIGHT (8) FEET ON CENTER, PLACED ALONG THE BOUNDARY OF THE TREE PROTECTION ZONE.
23. TREES BEING REMOVED SHALL NOT BE FELLED, PUSHED OR PULLED INTO A TREE PROTECTION ZONE OR INTO TREES THAT ARE TO BE RETAINED.
24. WATER TREES AND OTHER VEGETATION TO REMAIN WITHIN LIMITS OF CONTRACT WORK AS REQUIRED TO MAINTAIN THEIR HEALTH DURING COURSE OF CONSTRUCTION OPERATIONS.
25. BURNING OR BURIAL OF REMOVED/EXCESS MATERIALS IS NOT PERMITTED ON PROJECT SITE.
26. CONTRACTOR RESPONSIBLE FOR CLEANING AND UNPLUGGING EXISTING STORM INLETS AND PIPES.
27. THE CONTRACTOR IS RESPONSIBLE TO REPAIR ALL PAVEMENT, CONCRETE WALKS, CURB, AND DRIVES DAMAGED IN THE PROCESS OF TRANSPORTING CONSTRUCTION VEHICLES AND EQUIPMENT.

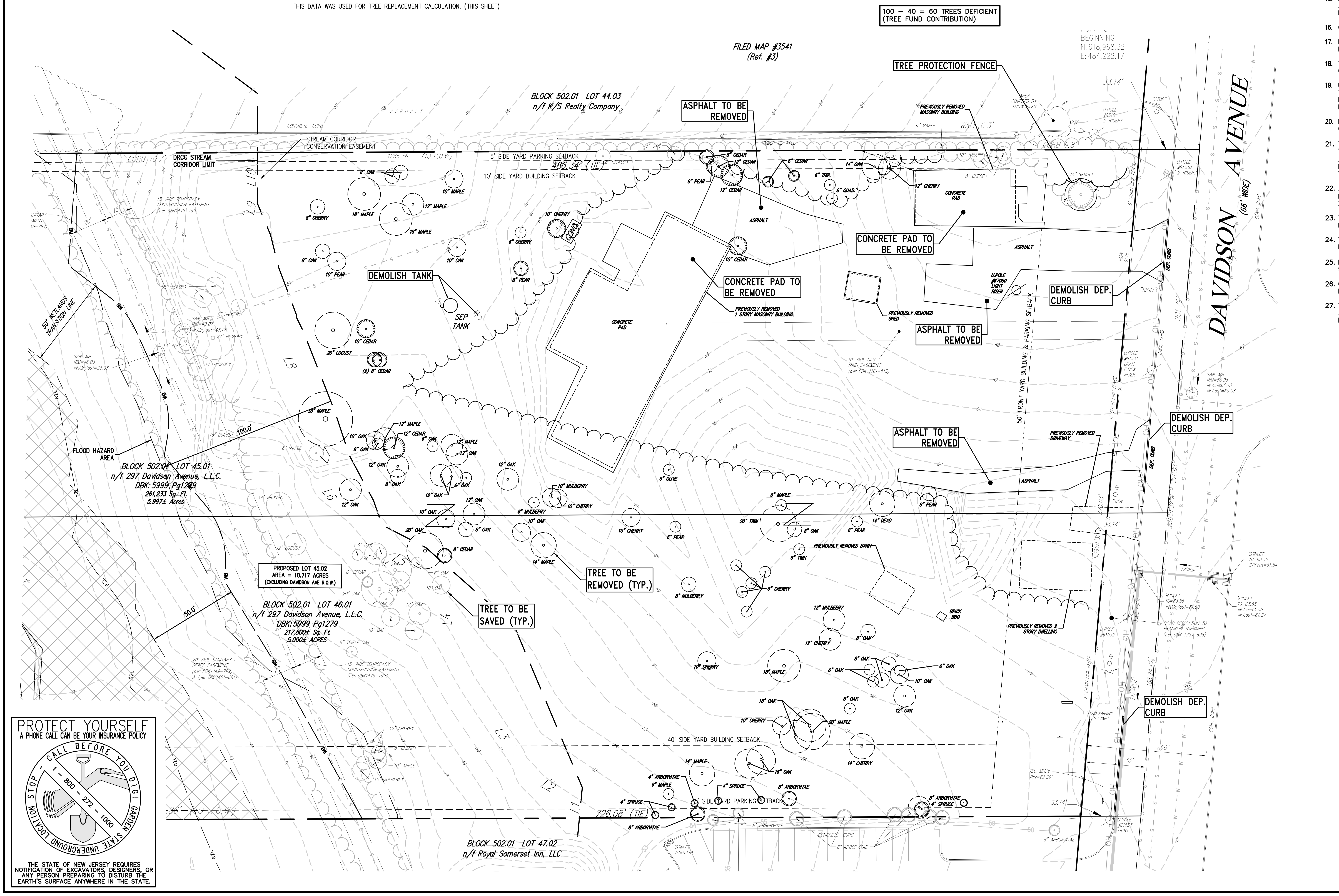
FILED MAP #3541
(Ref. #3)
POINT OF BEGINNING
N: 618,968.32
E: 484,222.17
TREE PROTECTION FENCE
BLOCK 502.01 LOT 44.03
n/f K/S Realty Company
ASPHALT
CONCRETE CURB
STREAM CORRIDOR CONSERVATION EASEMENT
DRCC STREAM CORRIDOR LIMIT
CURB 10.7'
1266.86' (TO R.O.W.)
5' SIDE YARD PARKING SETBACK
486.34' (TIE)
10' SIDE YARD BUILDING SETBACK
15' WIDE TEMPORARY CONSTRUCTION EASEMENT (per DBK1449-799)
50' WETLANDS TRANSITION LINE
SAN. MH RIM=49.07 INV.in/out=43.17
SAN. MH RIM=46.03 INV.in/out=38.03
DEMOLISH TANK
SEP TANK
CONCRETE PAD
ASPHALT TO BE REMOVED
CONCRETE PAD TO BE REMOVED
PREVIOUSLY REMOVED 1 STORY MASONRY BUILDING
PREVIOUSLY REMOVED MASONRY BUILDING
PREVIOUSLY REMOVED SHED
AREA COVERED BY SNOW PILES
WALL 6.3'
TIMBER TIE WALL
CURB 9.8'
33.14'
"STOP"
U.POLE #8518 2-RISERS
U.POLE #61530 2-RISERS
U.POLE #67050 LIGHT RISER
U.POLE #61531 LIGHT E.BOX RISER
U.POLE #61532
U.POLE #61553 LIGHT
6' CHAIN LINK FENCE
IRON GATE
DEMOLISH DEP. CURB
DEP. CURB
"SIGN"
201.79'
DAVIDSON AVENUE (66' WIDE)
CONC. CURB
SAN. MH RIM=65.98 INV.in=60.18 INV.out=60.08
10' WIDE GAS MAIN EASEMENT (per DBK 1161-513)
50' FRONT YARD BUILDING & PARKING SETBACK
PREVIOUSLY REMOVED DRIVEWAY
370.03'
S38°01'32"W
FLOOD HAZARD AREA
100.0'
BLOCK 502.01 LOT 45.01
n/f 297 Davidson Avenue, L.L.C.
DBK:5999 Pg1279
261,233 Sq. Ft.
5.997± Acres
PROPOSED LOT 45.02
AREA = 10.717 ACRES
(EXCLUDING DAVIDSON AVE R.O.W.)
BLOCK 502.01 LOT 46.01
n/f 297 Davidson Avenue, L.L.C.
DBK:5999 Pg1279
217,800± Sq. Ft.
5.000± ACRES
50.0'
20' WIDE SANITARY SEWER EASEMENT (per DBK1449-799) & (per DBK1451-681)
TREE TO BE REMOVED (TYP.)
TREE TO BE SAVED (TYP.)
PREVIOUSLY REMOVED BARN
BRICK BBQ
PREVIOUSLY REMOVED 2 STORY DWELLING
40' SIDE YARD BUILDING SETBACK
726.08' (TIE)
'B' INLET TG=63.50 INV.out=61.54
'B' INLET TG=63.56 INV.in/out=61.00
'E' INLET TG=63.85 INV.in=61.55 INV.out=61.27
12"RCP
18"RCP
ROAD DEDICATION TO FRANKLIN TOWNSHIP (per DBK 1394-638)
168.24'
"NO PARKING ANY TIME"
TEL. MH.'s RIM=62.39'
66'
33'
'B' INLET TG=53.61
BLOCK 502.01 LOT 47.02
n/f Royal Somerset Inn, LLC
L2
L3
L4
L5
L6
L7
L8
L9
L10
RZL
WB

PROTECT YOURSELF
A PHONE CALL CAN BE YOUR INSURANCE POLICY
STOP – CALL BEFORE YOU DIG! GARDEN STATE UNDERGROUND LOCATION
1 – 800 – 272 – 1000
THE STATE OF NEW JERSEY REQUIRES NOTIFICATION OF EXCAVATORS, DESIGNERS, OR ANY PERSON PREPARING TO DISTURB THE EARTH'S SURFACE ANYWHERE IN THE STATE.

GRAPHIC SCALE

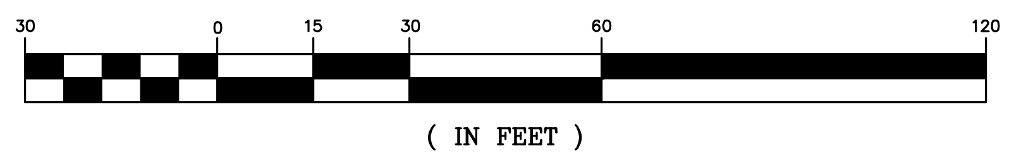
30
0
15
30
60
120

(IN FEET)
1 inch = 30 ft.

revisions

no.	date	description
1	10/12/21	PER SCD & TWP COMMENTS/NJDEP PERMIT PLAN
2	01/17/22	PER DEP, DRCC & COUNTY COMMENTS

LEGEND

⋈	GAS VALVE
Ⓖ	GAS METER
⋈	WATER VALVE
☼	HYDRANT
Ⓦ	WATER METER
CS ⊕	CURB STOP
FDC ○	FIRE DEPT. CONNECTION
	DRAINAGE MH
▬	CURB INLET
▤	LAWN INLET
Ⓢ	SANITARY MH
C.O. ○	CLEANOUT
○	BOLLARD
○ˢ	SIGN
☼	LIGHT
Ⓜ	MAIL BOX
⊸	GUY WIRE
⊖	UTILITY POLE
Ⓔ	ELECTRIC MH
⊙	CONIFEROUS TREE
⊙	DECIDUOUS TREE
— X —	FENCE
–o——o—	RAILING
▭	WALL
◉	GATE POST
— W —	WATER LINE
— G —	GAS LINE
— E —	ELECTRIC LINE
— S —	SANITARY LINE
—OH—	OVERHEAD WIRES
	DOOR LOCATION

Engineers
Landscape Architects
Land Surveyors
Planners
575 Route 28, Suite 110
Raritan, N.J. 08869
908–722–1500
Fax 908–722–7035
www.reynoldsgrp.com

The Reynolds Group Inc.

State of New Jersey
Certificate of Authorization
Number 24GA27969200
21MH00004300

F. Mitchel Ardman, P.E., P.P.
Jeffrey D. Reynolds, P.L.A.

F Mitchel Ardman
F. MITCHEL ARDMAN
N.J. PROFESSIONAL ENGINEER LIC. NO. 34317

project

ACCESS SELF STORAGE

BLOCK 502.01, LOTS 45.01 & 46.01
297 & 305 DAVIDSON AVENUE
TOWNSHIP OF FRANKLIN
SOMERSET COUNTY, NEW JERSEY

drawing title

EXISTING CONDITIONS / DEMOLITION & TREE REPLACEMENT PLAN

job number 21–010	drawing number 3
scale 1"=30'	
checked by FMA	
drawn by GH	
date 08/31/2021	sheet 3 of 15

J:\ENGINEERING PROJECTS\2021\21-010 - 297 DAVIDSON AVE_CAD\DESIGN\21-010 BASEMAP (R2).DWG-(1/25/22)

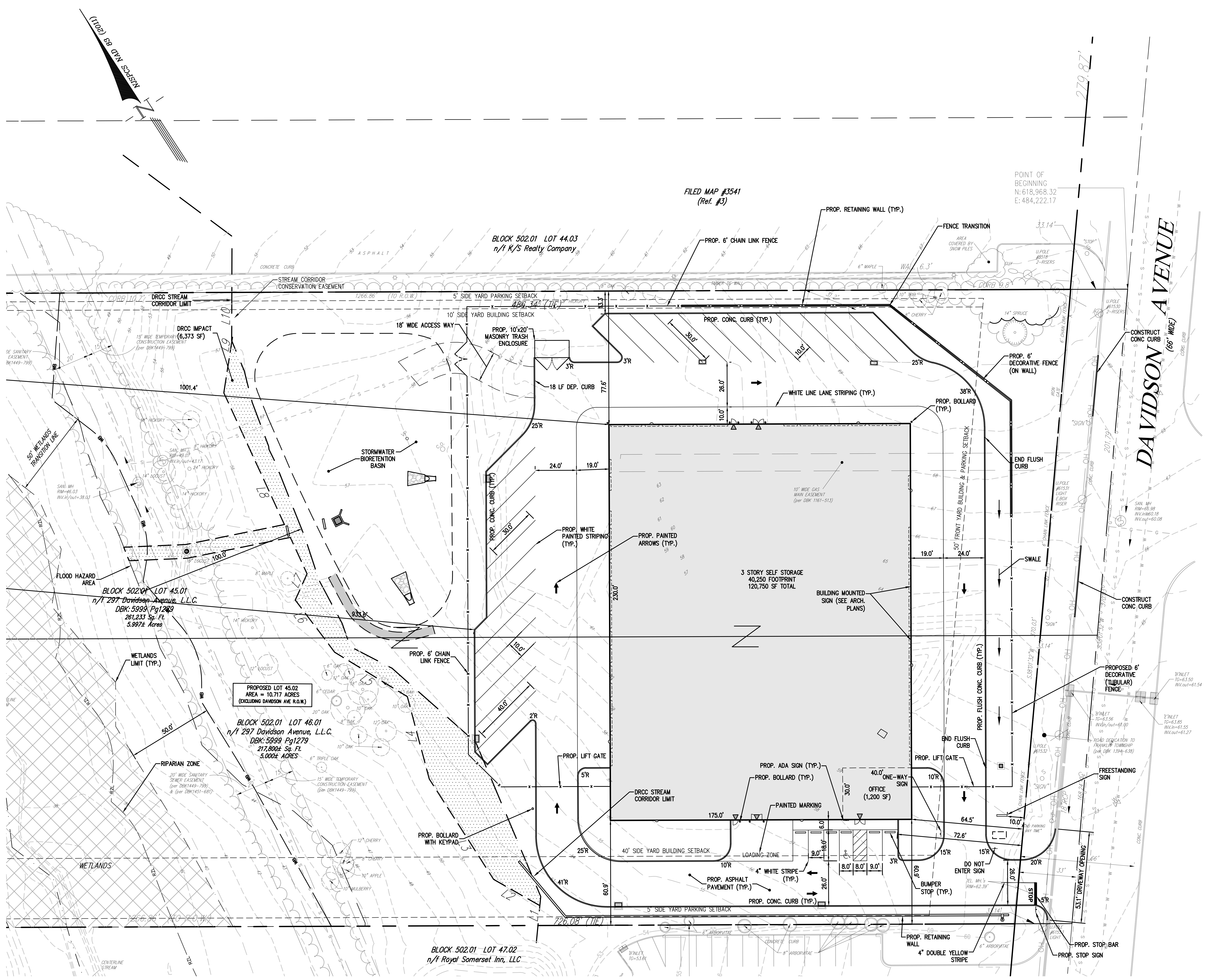
NJSPCS NAD 83 (2011)
N
FILED MAP #3541
(Ref. #3)
BLOCK 502.01 LOT 44.03
n/f K/S Realty Company
CONCRETE CURB
ASPHALT
STREAM CORRIDOR CONSERVATION EASEMENT
DRCC STREAM CORRIDOR LIMIT
CURB 10.7'
1266.86' (TO R.O.W.)
5' SIDE YARD PARKING SETBACK
486.34' (TIE)
10' SIDE YARD BUILDING SETBACK
18' WIDE ACCESS WAY
PROP. 10'x20' MASONRY TRASH ENCLOSURE
DRCC IMPACT (6,373 SF)
15' WIDE TEMPORARY CONSTRUCTION EASEMENT (per DBK1449-799)
18 LF DEP. CURB
1001.4'
50' WETLANDS TRANSITION LINE
STORMWATER BIORETENTION BASIN
SAN. MH RIM=49.07 INV.in/out=43.17
SAN. MH RIM=46.03 INV.in/out=38.03
PROP. CONC. CURB (TYP.)
PROP. WHITE PAINTED STRIPING (TYP.)
PROP. PAINTED ARROWS (TYP.)
FLOOD HAZARD AREA
BLOCK 502.01 LOT 45.01
n/f 297 Davidson Avenue, L.L.C.
DBK:5999 Pg1279
261,233 Sq. Ft.
5.997± Acres
933.6'
PROP. 6' CHAIN LINK FENCE
WETLANDS LIMIT (TYP.)
PROPOSED LOT 45.02
AREA = 10.717 ACRES
(EXCLUDING DAVIDSON AVE R.O.W.)
BLOCK 502.01 LOT 46.01
n/f 297 Davidson Avenue, L.L.C.
DBK:5999 Pg1279
217,800± Sq. Ft.
5.000± ACRES
RIPARIAN ZONE
20' WIDE SANITARY SEWER EASEMENT (per DBK1449-799) & (per DBK1451-681)
15' WIDE TEMPORARY CONSTRUCTION EASEMENT (per DBK1449-799)
PROP. LIFT GATE
DRCC STREAM CORRIDOR LIMIT
PROP. BOLLARD WITH KEYPAD
WETLANDS
40' SIDE YARD BUILDING SETBACK
726.08' (TIE)
BLOCK 502.01 LOT 47.02
n/f Royal Somerset Inn, LLC
CENTERLINE STREAM
PROP. RETAINING WALL (TYP.)
PROP. 6' CHAIN LINK FENCE
FENCE TRANSITION
AREA COVERED BY SNOW PILES
WALL 6.3'
CURB 9.8'
POINT OF BEGINNING
N:618,968.32
E:484,222.17
PROP. CONC. CURB (TYP.)
PROP. 6' DECORATIVE FENCE (ON WALL)
WHITE LINE LANE STRIPING (TYP.)
PROP. BOLLARD (TYP.)
END FLUSH CURB
CONSTRUCT CONC CURB
DAVIDSON AVENUE
(66' WIDE)
10' WIDE GAS MAIN EASEMENT (per DBK 1161-513)
3 STORY SELF STORAGE
40,250 FOOTPRINT
120,750 SF TOTAL
BUILDING MOUNTED SIGN (SEE ARCH. PLANS)
50' FRONT YARD BUILDING & PARKING SETBACK
SWALE
CONSTRUCT CONC CURB
PROP. FLUSH CONC. CURB (TYP.)
PROPOSED 6' DECORATIVE (TUBULAR) FENCE
END FLUSH CURB
PROP. LIFT GATE
ROAD DEDICATION TO FRANKLIN TOWNSHIP (per DBK 1394-638)
FREESTANDING SIGN
PROP. ADA SIGN (TYP.)
PROP. BOLLARD (TYP.)
ONE-WAY SIGN
OFFICE (1,200 SF)
PAINTED MARKING
LOADING ZONE
4" WHITE STRIPE (TYP.)
PROP. ASPHALT PAVEMENT (TYP.)
PROP. CONC. CURB (TYP.)
5' SIDE YARD PARKING SETBACK
DO NOT ENTER SIGN
BUMPER STOP (TYP.)
NO PARKING ANY TIME
53.1' DRIVEWAY OPENING
PROP. RETAINING WALL
4" DOUBLE YELLOW STRIPE
PROP. STOP BAR
PROP. STOP SIGN
STOP
24.0'
19.0'
30.0'
10.0'
40.0'
26.0'
77.6'
230.0'
175.0'
64.5'
72.6'
60.9'
9.0'
8.0'
18.0'
6.0'
100.0'
50.0'
25'R
3'R
38'R
2'R
5'R
10'R
15'R
20'R
41'R

GENERAL NOTES:

1. ALL CONSTRUCTION SHALL CONFORM TO MUNICIPAL ENGINEERING AND SEWER AUTHORITY STANDARDS, THE STANDARDS OF THE RESPECTIVE UTILITY COMPANIES, AND THE N.J.D.O.T. SPECIFICATIONS FOR ROAD AND BRIDGE CONSTRUCTION, 2019 AND AS UPDATED.
2. THE CONTRACTOR SHALL PROTECT ALL STRUCTURES, ROADS, PIPELINES, TREES, SHRUBBERY, GRASS AREA, ETC., DURING THE PROGRESS OF HIS WORK AND SHALL REMOVE FROM THE SITE ALL CUTTINGS, DRILLINGS, DEBRIS AND UNUSED MATERIALS. UPON COMPLETION OF THE WORK, THE CONTRACTOR SHALL RESTORE THE SITE TO ITS ORIGINAL CONDITION, INCLUDING AT THE CONTRACTOR'S SOLE EXPENSE, THE REPLACEMENT OF GRASSED AREAS WHICH HAVE BEEN DAMAGED.
3. THE CONTRACTOR SHALL BE RESPONSIBLE FOR ANY DAMAGE TO SURROUNDING PROPERTY AND SHALL RESTORE ANY PROPERTY DAMAGED AS A RESULT OF HIS OPERATIONS. ALL RESTORATION WILL BE BORNE BY THE CONTRACTOR AT NO ADDITIONAL COST TO THE OWNER.
4. THE CONTRACTOR SHALL COORDINATE WITH THE LOCAL FIRE OFFICIAL FOR APPROPRIATE FIRE LANE MARKINGS.
5. TRAFFIC AND PARKING SIGNS SHALL BE IN ACCORDANCE WITH THE "MANUAL ON UNIFORM TRAFFIC CONTROL DEVICES", U.S.D.O.T. FEDERAL HIGHWAY ADMINISTRATION, 2009 AND AS UPDATED.
6. RECYCLING AND GARBAGE SHALL BE PICKED UP BY A PRIVATE HAULER.
7. SEE ADDITIONAL CONSTRUCTION NOTES ON OTHER PLAN SHEETS IN THIS SET.

revisions

no.	date	description
1	10/12/21	PER SCD & TWP COMMENTS/NJDEP PERMIT PLAN
2	01/17/22	PER DEP, DRCC & COUNTY COMMENTS

LEGEND

G⋈	GAS VALVE
Ⓖ	GAS METER
W⋈	WATER VALVE
	HYDRANT
Ⓦ	WATER METER
CS	CURB STOP
FDC	FIRE DEPT. CONNECTION
Ⓓ	DRAINAGE MH
▬	CURB INLET
■	LAWN INLET
Ⓢ	SANITARY MH
CO	CLEANOUT
○	BOLLARD
	SIGN
☼	LIGHT
	MAIL BOX
	GUY WIRE
	UTILITY POLE
Ⓔ	ELECTRIC MH
	CONIFEROUS TREE
	DECIDUOUS TREE
—X—	FENCE
	RAILING
	WALL
◉	GATE POST
—W—	WATER LINE
—G—	GAS LINE
—E—	ELECTRIC LINE
—S—	SANITARY LINE
—OH—	OVERHEAD WIRES
▽	DOOR LOCATION

Engineers
Landscape Architects
Land Surveyors
Planners
575 Route 28, Suite 110
Raritan, N.J. 08869
908-722-1500
Fax 908-722-7035
www.reynoldsgrp.com

The Reynolds Group Inc.

State of New Jersey
Certificate of Authorization
Number 24GA27969200
21MH00004300

F. Mitchel Ardman, P.E., P.P.
Jeffrey D. Reynolds, P.L.A.

F Mitchel Ardman
F. MITCHEL ARDMAN
N.J. PROFESSIONAL ENGINEER LIC. NO. 34317

project

ACCESS SELF STORAGE

BLOCK 502.01, LOTS 45.01 & 46.01
297 & 305 DAVIDSON AVENUE
TOWNSHIP OF FRANKLIN
SOMERSET COUNTY, NEW JERSEY

drawing title

DIMENSION PLAN

job number: 21-010
scale: 1"=30'
checked by: FMA
drawn by: GH
date: 08/31/2021
drawing number: 4
sheet 4 of 15

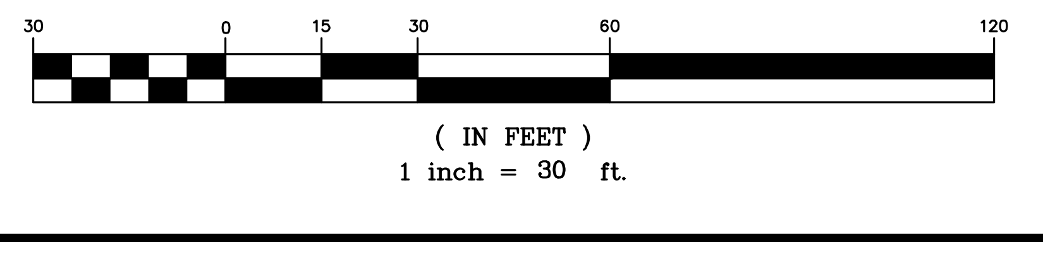
GRAPHIC SCALE
30
0
15
30
60
120
(IN FEET)
1 inch = 30 ft.

PROTECT YOURSELF
A PHONE CALL CAN BE YOUR INSURANCE POLICY
CALL BEFORE YOU DIG!
1 - 800 - 272 - 1000
GARDEN STATE UNDERGROUND LOCATION STOP
THE STATE OF NEW JERSEY REQUIRES NOTIFICATION OF EXCAVATORS, DESIGNERS, OR ANY PERSON PREPARING TO DISTURB THE EARTH'S SURFACE ANYWHERE IN THE STATE.

J:\ENGINEERING PROJECTS\2021\21-010 - 297 DAVIDSON AVE_CAD\DESIGN\21-010 BASEMAP (R2).DWG-(1/25/22)

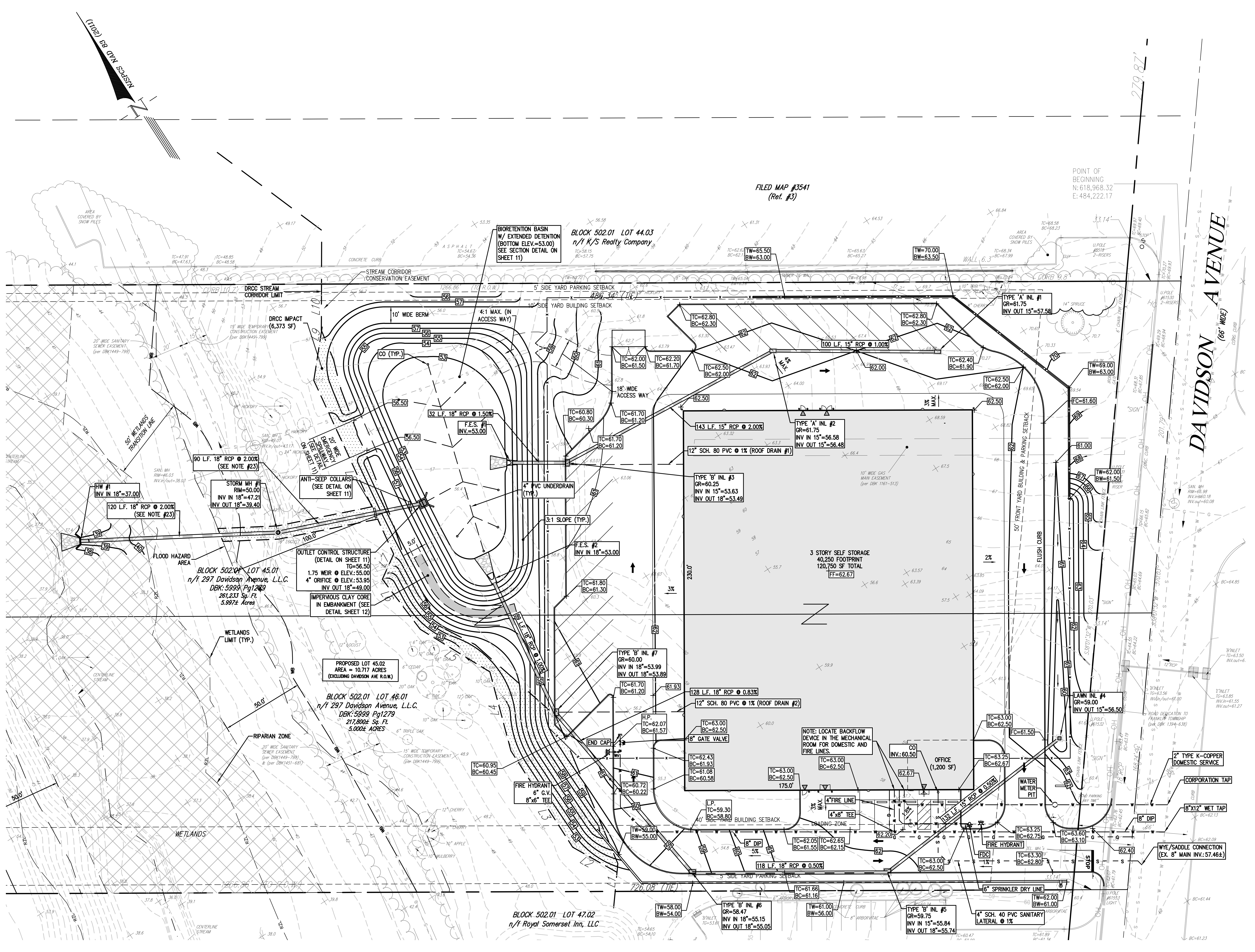
NJSPCS NAD 83 (2011)
N
FILED MAP #3541 (Ref. #3)
POINT OF BEGINNING N:618,968.32 E:484,222.17
DAVIDSON AVENUE (66' WIDE)
BLOCK 502.01 LOT 44.03 n/f K/S Realty Company
BLOCK 502.01 LOT 45.01 n/f 297 Davidson Avenue, L.L.C. DBK:5999 Pg1279 261,233 Sq. Ft. 5.997± Acres
BLOCK 502.01 LOT 46.01 n/f 297 Davidson Avenue, L.L.C. DBK:5999 Pg1279 217,800± Sq. Ft. 5.000± ACRES
BLOCK 502.01 LOT 47.02 n/f Royal Somerset Inn, LLC
PROPOSED LOT 45.02 AREA = 10.717 ACRES (EXCLUDING DAVIDSON AVE R.O.W.)
BIORETENTION BASIN W/ EXTENDED DETENTION (BOTTOM ELEV.=53.00) SEE SECTION DETAIL ON SHEET 11)
STREAM CORRIDOR CONSERVATION EASEMENT
DRCC STREAM CORRIDOR LIMIT
DRCC IMPACT (6,373 SF)
10' WIDE BERM
4:1 MAX. (IN ACCESS WAY)
18' WIDE ACCESS WAY
5' SIDE YARD PARKING SETBACK
10' SIDE YARD BUILDING SETBACK
40' SIDE YARD BUILDING SETBACK
50' FRONT YARD BUILDING & PARKING SETBACK
50' WETLANDS TRANSITION LINE
20' WIDE EMERGENCY SPILLWAY (SEE DETAIL ON SHEET 11)
CO (TYP.)
32 L.F. 18" RCP @ 1.50%
F.E.S. #1 INV.=53.00
F.E.S. #2 INV IN 18"=53.00
90 L.F. 18" RCP @ 2.00% (SEE NOTE #23)
120 L.F. 18" RCP @ 2.00% (SEE NOTE #23)
HW #1 INV IN 18"=37.00
STORM MH #1 RIM=50.00 INV IN 18"=47.21 INV OUT 18"=39.40
ANTI-SEEP COLLARS (SEE DETAIL ON SHEET 11)
4" PVC UNDERDRAIN (TYP.)
3:1 SLOPE (TYP.)
OUTLET CONTROL STRUCTURE (DETAIL ON SHEET 11) TG=56.50 1.75 WEIR @ ELEV.:55.00 4" ORIFICE @ ELEV.:53.95 INV OUT 18"=49.00
IMPERVIOUS CLAY CORE IN EMBANKMENT (SEE DETAIL SHEET 12)
FLOOD HAZARD AREA
WETLANDS LIMIT (TYP.)
WETLANDS
RIPARIAN ZONE
20' WIDE SANITARY SEWER EASEMENT (per DBK1449-799)
15' WIDE TEMPORARY CONSTRUCTION EASEMENT (per DBK1449-799)
89 L.F. 18" RCP @ 1.00%
100 L.F. 15" RCP @ 1.00%
143 L.F. 15" RCP @ 2.00%
128 L.F. 18" RCP @ 0.83%
118 L.F. 18" RCP @ 0.50%
132 L.F. 15" RCP @ 0.50%
12" SCH. 80 PVC @ 1% (ROOF DRAIN #1)
12" SCH. 80 PVC @ 1% (ROOF DRAIN #2)
TYPE 'A' INL #1 GR=61.75 INV OUT 15"=57.58
TYPE 'A' INL #2 GR=61.75 INV IN 15"=56.58 INV OUT 15"=56.48
TYPE 'B' INL #3 GR=60.25 INV IN 15"=53.63 INV OUT 18"=53.49
LAWN INL #4 GR=59.00 INV OUT 15"=56.50
TYPE 'B' INL #5 GR=59.75 INV IN 15"=55.84 INV OUT 18"=55.74
TYPE 'B' INL #6 GR=58.47 INV IN 18"=55.15 INV OUT 18"=55.05
TYPE 'B' INL #7 GR=60.00 INV IN 18"=53.99 INV OUT 18"=53.89
TW=65.50 BW=63.00
TW=70.00 BW=63.50
TW=69.00 BW=63.00
TW=62.00 BW=61.50
TW=59.00 BW=55.00
TW=58.00 BW=54.00
TW=61.00 BW=56.00
TW=62.00 BW=61.00
3 STORY SELF STORAGE 40,250 FOOTPRINT 120,750 SF TOTAL FF=62.67
OFFICE (1,200 SF)
230.0'
175.0'
10' WIDE GAS MAIN EASEMENT (per DBK 1161-513)
FLUSH CURB
NOTE: LOCATE BACKFLOW DEVICE IN THE MECHANICAL ROOM FOR DOMESTIC AND FIRE LINES.
CO INV.:60.50
LOADING ZONE
4"FIRE LINE
4"x8" TEE
8" GATE VALVE
END CAP
FIRE HYDRANT 6" G.V. 8"x6" TEE
8" DIP
FIRE HYDRANT
FDC
WATER METER PIT
6" SPRINKLER DRY LINE
4" SCH. 40 PVC SANITARY LATERAL @ 1%
2" TYPE K-COPPER DOMESTIC SERVICE
CORPORATION TAP
8"X12" WET TAP
WYE/SADDLE CONNECTION (EX. 8" MAIN INV.:57.46±)
H.P. TC=62.07 BC=61.57
L.P. TC=59.30 BC=58.80
STOP
726.08' (TIE)
1266.86' (TO R.O.W.)
486.34' (TIE)
ROAD DEDICATION TO FRANKLIN TOWNSHIP (per DBK 1394-638)

GRADING AND UTILITY NOTES:

1. CONTOURS AND UTILITY INFORMATION SHOWN IS BASED UPON A "BOUNDARY, TOPOGRAPHIC & WETLANDS SURVEY" PREPARED BY THE REYNOLDS GROUP INC., DATED 05/13/2016. FOR REFERENCES NOTED ON THIS PLAN, REFER TO THE BOUNDARY AND TOPOGRAPHIC SURVEY.
2. IT IS THE RESPONSIBILITY OF THE CONTRACTOR TO VERIFY ALL UTILITY LOCATIONS AND INFORMATION (SIZE, DEPTH, SLOPE, ETC.) VIA TEST PIT PRIOR TO COMMENCEMENT OF CONSTRUCTION. LOCATIONS AND INFORMATION FROM TEST PITS SHALL BE PROVIDED TO THE OWNER AND ENGINEER IN WRITING. SHOULD ANY CONFLICTS ARISE, CONTRACTOR SHALL NOTIFY ENGINEER AND OWNER IN WRITING. CONSTRUCTION SHALL NOT PROCEED UNTIL CONFLICT IS RESOLVED.
3. ALL CONSTRUCTION SHALL CONFORM TO MUNICIPAL ENGINEERING DEPARTMENT AND SEWERAGE AUTHORITY, THE THE STANDARDS OF THE RESPECTIVE UTILITY COMPANIES AND THE N.J.D.O.T. SPECIFICATIONS FOR ROAD AND BRIDGE CONSTRUCTION, 2019 AND AS UPDATED.
4. THE CONTRACTOR SHALL GRADE ALL AREAS TO PROVIDE POSITIVE SLOPE TO CATCH BASINS. LAWN AREAS SHALL BE GRADED AT A MINIMUM 2% SLOPE, AND AWAY FROM THE BUILDING. PAVEMENT AREAS SHALL HAVE A 1% MINIMUM SLOPE, UNLESS OTHERWISE NOTED.
5. ALL PROPOSED CONTOURS SHALL BE GRADED TO BLEND EVENLY WITH EXISTING CONTOURS.
6. IF SITE IS TO BE LEFT UNWORKED FOR MORE THAN 30 DAYS, THE SITE SHALL BE GRADED AND SEEDED AT THE CONTRACTORS EXPENSE.
7. ALL UTILITIES SHALL BE INSTALLED UNDERGROUND.
8. EXCAVATIONS OR TRENCHING WITHIN CLOSE PROXIMITY TO UNDERGROUND FACILITIES OR UTILITY POLES WILL REQUIRE PROTECTION IN AN APPROVED MANNER TO PREVENT DAMAGE OR INTERRUPTION OF SERVICE TO UNDERGROUND FACILITIES. THE COST TO PROVIDE THIS PROTECTION WILL BE BORNE BY THE CONTRACTOR.
9. ALL TRENCHES SHALL BE BACKFILLED WITHOUT DELAY. OPEN TRENCHES SHALL BE KEPT TO A MINIMUM. OPEN TRENCHES SHALL BE STEEL PLATED OR BARRICADED WHEN WORK IS NOT IN PROGRESS. ALL EXISTING CONTOUR LINES, PROFILES AND SPOT ELEVATIONS ARE APPROXIMATE. WITHIN THE WETLANDS AND TRANSITION AREAS, THE UPPERMOST 18" OF EXCAVATION SHALL BE BACKFILLED WITH THE ORIGINAL TOPSOIL MATERIAL IF FEASIBLE. THE TRENCH AREA SHALL BE REPLANTED WITH APPROPRIATE INDIGENOUS SPECIES.
10. THE CONTRACTOR SHALL BE RESPONSIBLE TO PROTECT IN AN APPROVED MANNER EXISTING THRUST BLOCKS WHICH ARE RESTRAINING EXISTING UTILITIES. EXISTING THRUST BLOCKS SHALL NOT BE UNDERMINED.
11. STORM & SANITARY IMPROVEMENTS SHALL BE INSTALLED BEFORE OTHER UTILITIES.
12. GAS LINE TO BUILDING TO BE INSTALLED BY UTILITY COMPANY.
13. SANITARY SEWER MAIN SHALL BE PVC SDR-35. SANITARY SEWER LATERAL SHALL BE SCHEDULE 40 PVC WITH CLEAN OUTS AS REQUIRED BY PLUMBING CODE. ALL CLEANOUTS IN PAVED AREA TO BE CONSTRUCTED IN ACCORDANCE WITH THE 'SIGHT TEE' DETAIL.
14. THE SEWER UTILITY AUTHORITY SHALL BE NOTIFIED AT LEAST 72 HOURS PRIOR TO A CONNECTION BEING MADE TO THE EXISTING SANITARY SEWERS AND/OR MANHOLES TO SCHEDULE REQUIRED INSPECTIONS.
15. WATER LINES SHALL BE DIP, CLASS 52-CL, SIZES AS NOTED ON PLAN. ALL WATER DISTRIBUTION PIPES, VALVES, FITTINGS AND APPURTENANCES SHALL BE LEAD FREE IN ACCORDANCE TO THE LATEST SAFE DRINKING WATER ACT, NSF/ANSI 61 AND AWWA REQUIREMENTS. CONTRACTOR TO COORDINATE WITH FIRE OFFICIAL FOR APPROVED FDC. DOMESTIC LINE SHALL BE TYPE 'K' COPPER. SEE PLUMBING PLAN FOR SPLIT OF DOMESTIC/FIRE SERVICE INSIDE THE BUILDING.
16. THE CONTRACTOR SHALL MAINTAIN A MINIMUM OF 4 FEET OF COVER ON THE INSTALLATION OF THE NEW WATER SERVICE. THE CONTRACTOR SHALL PROVIDE MECHANICAL JOINT RETAINER GLANDS AND THRUST BLOCKS AT ALL MECHANICAL JOINT FITTINGS. CONTRACTOR SHALL REMOVE EXISTING STORM SEWER PIPING AS REQUIRED TO INSTALL NEW UTILITIES (STORM, SEWER, WATER, ETC.). ALL OPEN ENDS OF STORM PIPING ABANDONED IN PLACE SHALL BE SEALED CLOSED WITH BRICK AND MORTAR.
17. SANITARY SEWER AND WATER MAINS SHALL BE SEPARATED A MINIMUM OF 10' HORIZONTALLY. IF SUCH LATERAL SEPARATION IS NOT POSSIBLE, PIPES SHALL BE IN SEPARATE TRENCHES WITH THE SEWER AT LEAST 18" BELOW THE BOTTOM OF THE WATER MAIN. WHERE APPROPRIATE SEPARATION FROM A WATER MAIN IS NOT POSSIBLE, THE SEWER SHALL BE ENCASED IN CONCRETE, OR CONSTRUCTED OF DUCTILE IRON PIPE USING MECHANICAL SLIP-ON JOINTS FOR A DISTANCE OF AT LEAST 10 FEET ON EITHER SIDE OF THE CROSSING. IN ADDITION, ONE FULL LENGTH OF SEWER PIPE SHOULD BE LOCATED SO BOTH JOINTS WILL BE AS FAR FROM THE WATER MAIN AS POSSIBLE. WHERE A WATER MAIN CROSSES UNDER A SEWER, ADEQUATE STRUCTURAL SUPPORT FOR THE SEWER SHALL BE PROVIDED.
18. EXISTING MAINS TO WHICH CONNECTIONS SHALL BE MADE ARE SIZED AND LOCATED IN ACCORDANCE WITH BEST INFORMATION AVAILABLE. THE CONTRACTOR SHALL BE PREPARED TO ACCOMMODATE CHANGES IN THE SIZE OR LOCATION BY MAINTAINING AT THE JOB SITE ADDITIONAL PIPE FITTINGS AND VALVES IN THE RANGES OF SIZES BEING USED. THIS ADDITIONAL MATERIAL SHALL BE AVAILABLE TO PREVENT DELAYS IN CONSTRUCTION.
19. STORM SEWERS SHALL BE CONSTRUCTED OF CLASS III RCP UNLESS OTHERWISE NOTED. STORM PIPE LAID THROUGH WETLANDS AND TRANSITION AREAS SHALL BE PROPERLY SEALED TO PREVENT LEAKING OR INFILTRATION.
20. ALL CASTINGS ARE TO BE U.S. MANUFACTURE. IF OTHER THAN CAMPBELL OR NEENAH CASTINGS ARE USED, COMPLETE DATA MUST BE SUBMITTED.
21. ROOF DRAIN CONNECTIONS SHALL BE PVC, SCHEDULE 40, EXCEPT UNDER PAVEMENT WHERE PIPE COVER IS LESS THAN 18", SCH. 80 SHALL BE USED. CONTRACTOR SHALL COORDINATE CONNECTION POINTS WITH ARCH AND MECHANICAL PLANS.
22. NO PIPE, INLET, MANHOLE, CURB, CONTROL CONTROL STRUCTURE OR LOW FLOW CHANNEL SHALL BE CONSTRUCTED WITHOUT CUT SHEETS. THE CONTRACTOR SHALL ALLOW TWO WORKING DAYS TO CHECK THE PROPOSED ELEVATIONS AGAINST THOSE ON THE CUT SHEET.
23. REINFORCED CONCRETE PIPES FROM THE BIORETENTION BASIN OUTLET STRUCTURE SHALL BE INSTALLED WITH RUBBER GASKETS.
24. ESTIMATED SEWER FLOW IS 370 GPD.
WATER USAGE IS ESTIMATED TO BE 400 GPD.
PUBLIC MAINS ARE AVAILABLE IN DAVIDSON AVENUE.

PROTECT YOURSELF
A PHONE CALL CAN BE YOUR INSURANCE POLICY
CALL BEFORE YOU DIG! 1-800-272-1000 GARDEN STATE UNDERGROUND LOCATION STOP
THE STATE OF NEW JERSEY REQUIRES NOTIFICATION OF EXCAVATORS, DESIGNERS, OR ANY PERSON PREPARING TO DISTURB THE EARTH'S SURFACE ANYWHERE IN THE STATE.

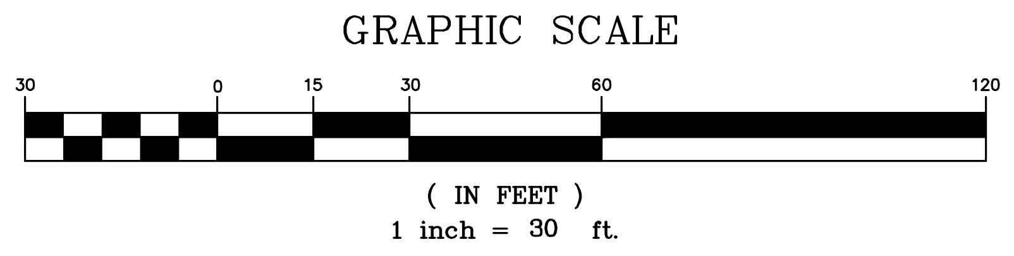
GRAPHIC SCALE
30
0
15
30
60
120
(IN FEET)
1 inch = 30 ft.

revisions

no.	date	description
1	10/12/21	PER SCD & TWP COMMENTS/NJDEP PERMIT PLAN
2	01/17/22	PER DEP, DRCC & COUNTY COMMENTS

LEGEND

- GAS VALVE
- GAS METER
- WATER VALVE
- HYDRANT
- WATER METER
- CURB STOP
- FIRE DEPT. CONNECTION
- DRAINAGE MH
- CURB INLET
- LAWN INLET
- SANITARY MH
- CLEANOUT
- BOLLARD
- SIGN
- LIGHT
- MAIL BOX
- GUY WIRE
- UTILITY POLE
- ELECTRIC MH
- CONIFEROUS TREE
- DECIDUOUS TREE
- — X — FENCE
- RAILING
- WALL
- GATE POST
- — W — WATER LINE
- — G — GAS LINE
- — E — ELECTRIC LINE
- — S — SANITARY LINE
- — OH — OVERHEAD WIRES
- ▼ DOOR LOCATION

Engineers
Landscape Architects
Land Surveyors
Planners
575 Route 28, Suite 110
Raritan, N.J. 08869
908-722-1500
Fax 908-722-7035
www.reynoldsgrp.com

The Reynolds Group Inc.

State of New Jersey
Certificate of Authorization
Number 24GA27969200
21MH00004300

F. Mitchel Ardman, P.E., P.P.
Jeffrey D. Reynolds, P.L.A.

F Mitchel Ardman
F. MITCHEL ARDMAN
N.J. PROFESSIONAL ENGINEER LIC. NO. 34317

project

ACCESS SELF STORAGE

BLOCK 502.01, LOTS 45.01 & 46.01
297 & 305 DAVIDSON AVENUE
TOWNSHIP OF FRANKLIN
SOMERSET COUNTY, NEW JERSEY

drawing title

GRADING & UTILITY PLAN

job number 21-010	drawing number 5
scale 1"=30'	
checked by FMA	
drawn by GH	
date 08/31/2021	sheet 5 of 15

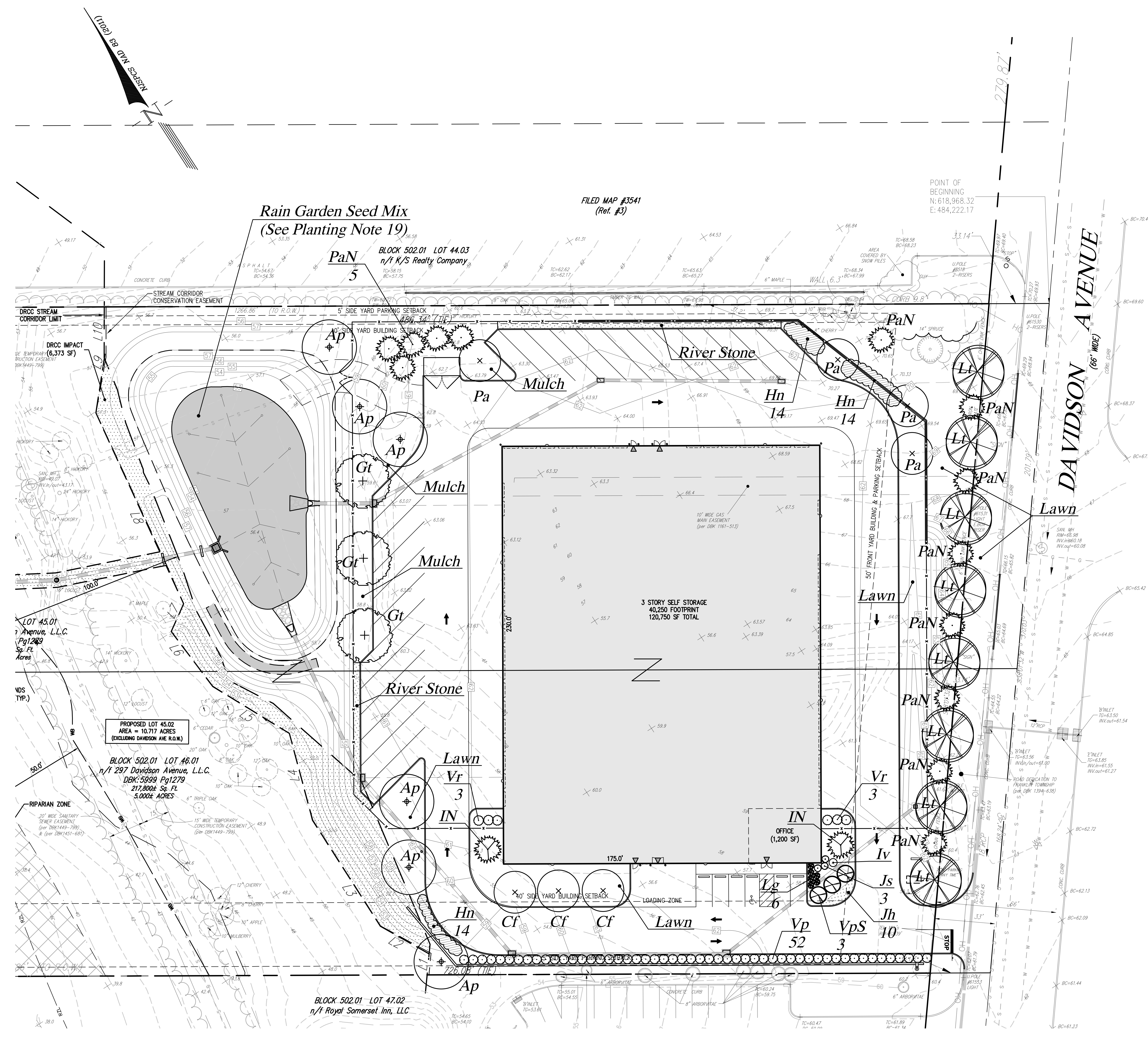
NJSPCS NAD 83 (2011)
Rain Garden Seed Mix
(See Planting Note 19)
FILED MAP #3541
(Ref. #3)
BLOCK 502.01 LOT 44.03
n/f K/S Realty Company
POINT OF BEGINNING
N:618,968.32
E:484,222.17
DAVIDSON AVENUE
(66' WIDE)
STREAM CORRIDOR CONSERVATION EASEMENT
DRCC STREAM CORRIDOR LIMIT
DRCC IMPACT (6,373 SF)
5' SIDE YARD PARKING SETBACK
10' SIDE YARD BUILDING SETBACK
50' FRONT YARD BUILDING & PARKING SETBACK
40' SIDE YARD BUILDING SETBACK
LOADING ZONE
1266.86' (TO R.O.W.)
486.34' (TIE)
726.08' (TIE)
WALL 6.3'
TIMBER TIE WALL
AREA COVERED BY SNOW PILES
10' WIDE GAS MAIN EASEMENT (per DBK 1161-513)
3 STORY SELF STORAGE
40,250 FOOTPRINT
120,750 SF TOTAL
OFFICE
(1,200 SF)
230.0'
175.0'
PROPOSED LOT 45.02
AREA = 10.717 ACRES
(EXCLUDING DAVIDSON AVE R.O.W.)
BLOCK 502.01 LOT 46.01
n/f 297 Davidson Avenue, L.L.C.
DBK:5999 Pg1279
217,800± Sq. Ft.
5.000± ACRES
LOT 45.01
RIPARIAN ZONE
20' WIDE SANITARY SEWER EASEMENT (per DBK1449-799) & (per DBK1451-681)
15' WIDE TEMPORARY CONSTRUCTION EASEMENT (per DBK1449-799)
BLOCK 502.01 LOT 47.02
n/f Royal Somerset Inn, LLC
ROAD DEDICATION TO FRANKLIN TOWNSHIP (per DBK 1394-638)
SAN. MH RIM=66.98 INV.in=60.18 INV.out=60.08
PaN 5
Ap
Ap
Ap
Pa
Mulch
Gt
Mulch
Gt
Mulch
Gt
River Stone
River Stone
Hn 14
Hn 14
Pa
Pa
Pa
PaN
Lt
PaN
Lt
PaN
Lt
Lawn
PaN
Lt
Lawn
PaN
Lt
PaN
Lt
PaN
Lt
PaN
Lt
Lawn
Vr 3
IN
Ap
Ap
Hn 14
Ap
Cf
Cf
Cf
Lawn
Lg 6
Vr 3
IN
Iv
Js 3
Jh 10
VpS 3
Vp 52
STOP

RAIN GARDEN Mix (2ZXMIXRAING)

15 lbs. per acre.

Botanical Name & % of Mix
Asclepias incarnata 1.00%
Asclepias syriaca 4.00%
Calamagrostis canadensis 3.00%
Carex lurida 3.00%
Cephalanthus occidentalis 1.00%
Conoclinium coelestinum 5.00%
Echinacea purpurea 8.00%
Elymus virginicus 8.00%
Helenium autumnale 3.00%
Heliopsis helianthoides 10.00%
Hibiscus moscheutos 1.00%
Iris versicolor 1.00%
Lobelia cardinalis 1.00%
Lobelia siphilitica 7.00%
Panicum virgatum 10.00%
Penstemon digitalis 9.00%
Rudbeckia hirta 6.00%
Scirpus atrovirens 2.00%
Scirpus cyperinus 4.00%
Solidago juncea 1.00%
Symphyotrichum laeve 3.00%
Tradescantia ohiensis 1.00%
Verbena hastata 4.00%
Vernonia noveboracensis 2.00%
Zizia aurea 2.00%

PLANTING NOTES

1. ALL PLANT MATERIAL TO BE FIRST QUALITY, NURSERY GROWN STOCK, FREE FROM DISEASE OR OBJECTIONABLE DISFIGUREMENTS. QUALITY AND SIZE OF PLANTS, INCLUDING ROOT SIZE SHALL BE IN ACCORDANCE WITH "AMERICAN STANDARDS FOR NURSERY STOCK" ANSI Z60.1 (MOST RECENT ADDITION) AS PUBLISHED BY THE AMERICAN ASSOCIATION OF NURSERYMEN.
2. CONTRACTOR TO VERIFY ALL PLANT DISCREPANCIES INCLUDING PLANT QUANTITIES BETWEEN PLANT LIST AND PLAN. CONTRACTOR SHALL BE RESPONSIBLE FOR INSTALLING QUANTITY WHICH IS GREATER.
3. NO SUBSTITUTES SHALL BE PERMITTED WITHOUT WRITTEN APPROVAL OF THE LANDSCAPE ARCHITECT.
4. ALL PROPOSED PLANT MATERIAL SHALL BE BALLED AND BURLAPPED UNLESS NOTED OTHERWISE ON PLANTING SCHEDULE.
5. ALL INSTALLED PLANT MATERIALS SHALL BEAR THE SAME RELATION TO GRADE WHEN INSTALLED ON SITE AS EXISTED IN NURSERY PRIOR TO DIGGING.
6. HOLES FOR PLANT MATERIALS (B&B) SHALL BE DUG A MINIMUM OF TWICE THE BALL DIAMETER. ALL PLANTS SHALL BE LOCATED IN THE CENTER OF THEIR RESPECTIVE PITS.
7. B&B PLANTS SHALL BE HANDLED FROM THE BOTTOM OF THE ROOT BALL ONLY. PLANTS WITH BROKEN, SLIT OR DAMAGED ROOT BALLS SHALL BE REJECTED.
8. PLANTS SHALL NOT BE BOUND AT ANY TIME WITH WIRE OR ROPE AS TO DAMAGE THE BARK AND BRANCHES.
9. PLANT MATERIAL SHALL BE PLANTED ON THE DAY OF DELIVERY. IN THE EVENT THIS IS NOT POSSIBLE THE CONTRACTOR WILL PROTECT THE STOCK THAT IS NOT PLANTED AND KEEP WELL WATERED. PLANTS SHALL NOT REMAIN UNPLANTED FOR MORE THAN A THREE DAY PERIOD AFTER BEING DELIVERED.
10. ALL STAKING AND GUYING WIRES SHALL BE FLAGGED WITH A BRIGHT REFLECTIVE MATERIAL TO WARN PEDESTRIANS
11. TOPSOIL AND SEED ALL AREAS DISTURBED BY CONSTRUCTION AND ALL LOCATIONS SHOWN AS LAWN AREAS ON PLAN. SEE NOTE 20 FOR SPECIFIC REQUIREMENTS WITHIN THE LIMIT OF THE BIORETENTION BASIN.
12. ALL PLANTS SHALL BE PLANTED IN AN APPROVED BACKFILL MIXTURE THAT IS THOROUGHLY WATERED AND TAMPED AS BACKFILLING PROGRESSES. ONLY SUITABLE TOPSOIL, FREE OF DRY SOD, STIFF CLAY, LITTER ETC., SHALL BE USED FOR PLANTING
13. ALL SHRUB BEDS AND TREE SAUCERS TO BE MULCHED AS DETAILED.
14. THE CONTRACTOR SHALL REPORT ANY SOIL OR DRAINAGE CONDITIONS CONSIDERED DETRIMENTAL TO THE GROWTH OF ANY OF THE PROPOSED PLANTING MATERIAL.
15. PROVIDE SNOW/TREE PROTECTION FENCING AS REQUIRED AROUND EXISTING TREES TO BE SAVED.
16. CONTRACTOR SHALL GUARANTEE ALL PLANT MATERIAL (NOT INCLUDING LAWNS) FOR A PERIOD OF ONE (1) YEAR FROM DATE OF ACCEPTANCE.
17. AFTER THE PLANTING CONTRACTOR HAS COMPLETED THE TERMS OF HIS CONTRACT, THE OWNER SHALL BE RESPONSIBLE FOR THE MAINTENANCE OF ALL PROPOSED PLANTINGS BY PROVIDING THE CORRECT METHODS OF WEEDING, SPRAYING, WATERING, PRUNING AND FERTILIZING ACCORDING TO GOOD HORTICULTURAL PRACTICE.
18. ALL TREES TO BE BRANCHED 7' HIGH.
19. BOTTOM OF BIORETENTION BASIN SHALL BE PLANTED WITH SITE TOLERANT GRASSES. USE PINELANDS NURSERY RAIN GARDEN MIX (ITEM CODE: 2XMIXRAING) OR APPROVED EQUAL.
20. SIDE SLOPES AND TOP OF BERM AREAS WITHIN BIORETENTION BASIN ARE TO BE TOPSOILED WITH A MINIMUM DEPTH OF 4 INCHES. TOPSOIL SHALL MEET THE STANDARD FOR "TOPSOIL" AS DEFINED IN THE NJDOT STANDARD SPECIFICATIONS FOR ROAD AND BRIDGE CONSTRUCTION. SEEDING SHALL CONFORM TO TYPE 'A' GRASS SEED MIXTURE.

PLANTING SCHEDULE

KEY	QTY.	BOTANICAL NAME	COMMON NAME	SIZE	ROOT	SPACING
		SHADE TREES				
Ap	6	Acer platanoides 'Crimson King'	Crimson King Maple	2.5–3" Cal.	B&B	As Shown
Gt	3	Gleditsia triacanthos inermis 'Shademaster'	Shademaster Honeylocust	2.5–3" Cal.	B&B	As Shown
Lt	8	Liriodendron tulipifera	Tulip Tree	2.5–3" Cal.	B&B	As Shown
		EVERGREEN TREES				
IN	2	Ilex x 'Nellie R. Stevens'	Nellie Stevens Holly	6–8' Ht.	B&B	As Shown
PaN	13	Picea abies	Norway Spruce	6–8' Ht.	B&B	As Shown
		ORNAMENTAL TREES				
Cf	3	Cornus Florida	Flowering Dogwood	2.5–3" Cal.	B&B	As Shown
Pa	4	Prunus 'Autumnalis'	Autumn Flowering Cherry	2.5–3" Cal.	B&B	As Shown
		SHRUBS				
Iv	1	Ilex verticillata 'Jim Dandy'	Jim Dandy Winterberry Holly	18–24" Ht.	B&B	4' oc
LG	6	Lagerstroemia 'Gamad I'	Dwarf Crapemyrtle	18–24" Ht.	Cont.	3' oc
VpS	3	Viburnum plicatum tomentosum 'Shasta'	Doublefile Vibu'Cherry Dazzle'	3–4' Ht.	B&B	As Shown
		EVERGREEN SHRUBS				
Js	3	Juniperus scopulorum	Skyrocket Juniper	3–4' Ht.	B&B	3' oc
Vr	6	Viburnum x rhytidophyllum	Leatherleaf Viburnum	18–24"	Cont.	5' oc
Vp	52	Viburnum pragense	Prague Viburnum	2–3' Ht.	Cont.	5' oc
		GROUNDCOVER				
Jh	10	Juniperus horizontalis 'Wiltoni'	Wiltons Blue Rug Juniper	15–18" Sp.	#3 Can	4' oc
		PERENNIALS				
HN	42	Hemerocallis	'Naturalizing' Daylilies	1 Gal.	Cont.	4' oc

40 REPLACEMENT TREES PROVIDED.
(SEE SHEET #3 FOR TREE REPLACEMENT REQUIREMENTS)

THIS PLAN TO BE USED FOR LANDSCAPE PURPOSES ONLY

GRAPHIC SCALE

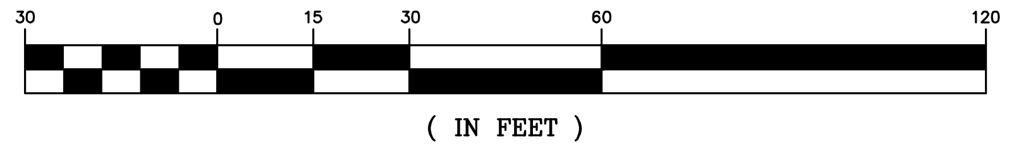
30
0
15
30
60
120

(IN FEET)
1 inch = 30 ft.

PROTECT YOURSELF
A PHONE CALL CAN BE YOUR INSURANCE POLICY

STOP - CALL BEFORE YOU DIG! GARDEN STATE UNDERGROUND LOCATION
1 - 800 - 272 - 1000

THE STATE OF NEW JERSEY REQUIRES NOTIFICATION OF EXCAVATORS, DESIGNERS, OR ANY PERSON PREPARING TO DISTURB THE EARTH'S SURFACE ANYWHERE IN THE STATE.

J:\ENGINEERING PROJECTS\2021\21-010 - 297 DAVIDSON AVE_CAD\DESIGN\21-010 BASEMAP (R2).DWG-(1/26/22)

revisions

no.	date	description
1	10/12/21	PER SCD & TWP COMMENTS/NJDEP PERMIT PLAN
2	01/17/22	PER DEP, DRCC & COUNTY COMMENTS

LEGEND

⋈	GAS VALVE
Ⓖ	GAS METER
⋈	WATER VALVE
☼	HYDRANT
Ⓦ	WATER METER
⊕	CURB STOP
FDC	FIRE DEPT. CONNECTION
Ⓓ	DRAINAGE MH
▬	CURB INLET
▤	LAWN INLET
Ⓢ	SANITARY MH
C.O.	CLEANOUT
○	BOLLARD
○	SIGN
☼	LIGHT
Ⓜ	MAIL BOX
○	GUY WIRE
⊖	UTILITY POLE
Ⓔ	ELECTRIC MH
⊙	CONIFEROUS TREE
⊙	DECIDUOUS TREE
— X —	FENCE
—○——○—	RAILING
▭	WALL
◉	GATE POST
— W —	WATER LINE
— G —	GAS LINE
— E —	ELECTRIC LINE
— S —	SANITARY LINE
—OH—	OVERHEAD WIRES
▼	DOOR LOCATION

Engineers
Landscape Architects
Land Surveyors
Planners
575 Route 28, Suite 110
Raritan, N.J. 08869
908-722-1500
Fax 908-722-7035
www.reynoldsgrp.com

The Reynolds Group Inc.

State of New Jersey
Certificate of Authorization
Number 24GA27969200
21MH00004300

F. Mitchel Ardman, P.E., P.P.
Jeffrey D. Reynolds, P.L.A.

Jeffrey D. Reynolds
JEFFREY D. REYNOLDS
N.J. LICENSED LANDSCAPE ARCHITECT AS000878

project

ACCESS SELF STORAGE

BLOCK 502.01, LOTS 45.01 & 46.01
297 & 305 DAVIDSON AVENUE
TOWNSHIP OF FRANKLIN
SOMERSET COUNTY, NEW JERSEY

drawing title

LANDSCAPE PLAN

job number 21-010	drawing number 6
scale 1"=30'	
checked by FMA	
drawn by GH	
date 08/31/2021	sheet 6 of 15

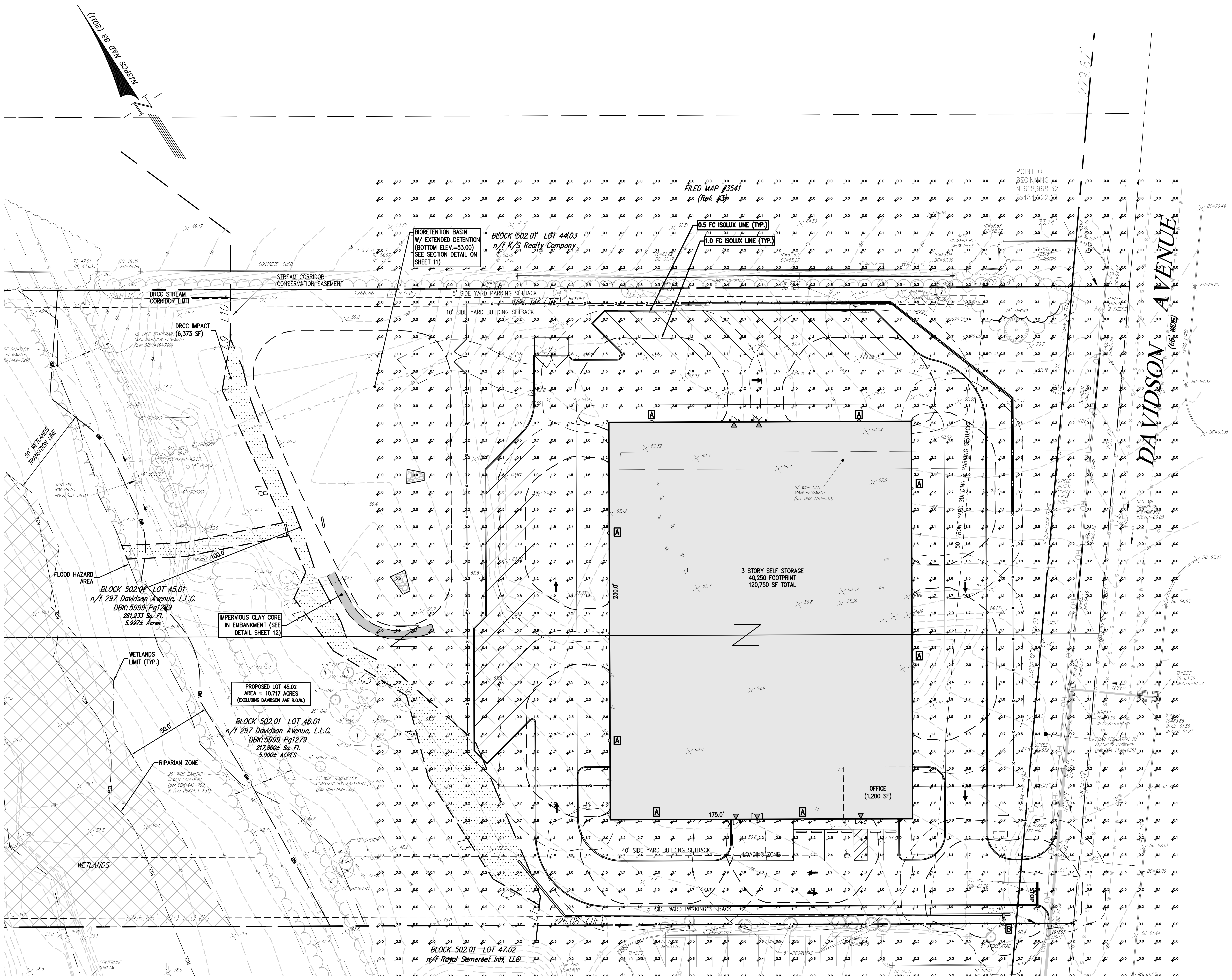
NJSPCS NAD 83 (2011)
N
FILED MAP #3541 (Ref. #3)
BIORETENTION BASIN W/ EXTENDED DETENTION (BOTTOM ELEV.=53.00) SEE SECTION DETAIL ON SHEET 11)
BLOCK 502.01 LOT 44.03
n/f K/S Realty Company
0.5 FC ISOLUX LINE (TYP.)
1.0 FC ISOLUX LINE (TYP.)
POINT OF BEGINNING N:618,968.32 E:484,222.17
STREAM CORRIDOR CONSERVATION EASEMENT
DRCC STREAM CORRIDOR LIMIT
CONCRETE CURB
1266.86' (TO R.O.W.)
5' SIDE YARD PARKING SETBACK
10' SIDE YARD BUILDING SETBACK
DRCC IMPACT (6,373 SF)
15' WIDE TEMPORARY CONSTRUCTION EASEMENT (per DBK1449-799)
50' WETLANDS TRANSITION LINE
FLOOD HAZARD AREA
BLOCK 502.01 LOT 45.01
n/f 297 Davidson Avenue, L.L.C.
DBK:5999 Pg1279
261,233 Sq. Ft.
5.997± Acres
IMPERVIOUS CLAY CORE IN EMBANKMENT (SEE DETAIL SHEET 12)
WETLANDS LIMIT (TYP.)
PROPOSED LOT 45.02
AREA = 10.717 ACRES
(EXCLUDING DAVIDSON AVE R.O.W.)
BLOCK 502.01 LOT 46.01
n/f 297 Davidson Avenue, L.L.C.
DBK:5999 Pg1279
217,800± Sq. Ft.
5.000± ACRES
50.0'
RIPARIAN ZONE
20' WIDE SANITARY SEWER EASEMENT (per DBK1449-799) & (per DBK1451-681)
WETLANDS
CENTERLINE STREAM
3 STORY SELF STORAGE
40,250 FOOTPRINT
120,750 SF TOTAL
10' WIDE GAS MAIN EASEMENT (per DBK 1161-513)
230.0'
175.0'
OFFICE (1,200 SF)
LOADING ZONE
40' SIDE YARD BUILDING SETBACK
50' FRONT YARD BUILDING & PARKING SETBACK
5' SIDE YARD PARKING SETBACK
726.08' (TIE)
BLOCK 502.01 LOT 47.02
n/f Royal Somerset Inn, LLC
DAVIDSON AVENUE (66' WIDE)
279.87'
A
B
STOP

LIGHTING PLAN

Schedule

Symbol	Label	QTY	Manufacturer	Catalog Number	Description	Lamp	Number Lamps	Filename	Lumens per Lamp	LLF	Wattage	Distribution
◓	A	8	Lithonia Lighting	DSX2 LED P1 30K T4M MVOLT	DSX2 LED P1 30K T4M MVOLT BUILDING MOUNTED 25' MOUNTING HEIGHT	LED	1	DSX2_LED_P1 _30K_T4M_MV OLT.ies	17221 Lamp	0.9	140	TYPE IV, SHORT, BUG RATING: B3-U0-G3
⊡	B	1	Lithonia Lighting	DSX2 LED P1 30K T4M MVOLT	DSX2 LED P1 30K T4M MVOLT POLE MOUNTED 20' MOUNTING HEIGHT	LED	1	DSX2_LED_P1 _30K_T4M_MV OLT.ies	17221	0.9	140	TYPE IV, SHORT, BUG RATING: B3-U0-G3

THIS PLAN TO BE USED FOR LIGHTING PURPOSES ONLY

GRAPHIC SCALE
30 0 15 30 60 120
(IN FEET)
1 inch = 30 ft.

PROTECT YOURSELF
A PHONE CALL CAN BE YOUR INSURANCE POLICY
CALL BEFORE YOU DIG! GARDEN STATE UNDERGROUND LOCATION STOP
1-800-272-1000
THE STATE OF NEW JERSEY REQUIRES NOTIFICATION OF EXCAVATORS, DESIGNERS, OR ANY PERSON PREPARING TO DISTURB THE EARTH'S SURFACE ANYWHERE IN THE STATE.

J:\ENGINEERING PROJECTS\2021\21-010 - 297 DAVIDSON AVE_CAD\DESIGN\21-010 BASEMAP (R2).DWG-(1/25/22)

revisions

no.	date	description
1	10/12/21	PER SCD & TWP COMMENTS/NJDEP PERMIT PLAN
2	01/17/22	PER DEP, DRCC & COUNTY COMMENTS

LEGEND

- GAS VALVE
- GAS METER
- WATER VALVE
- HYDRANT
- WATER METER
- CURB STOP
- FIRE DEPT. CONNECTION
- DRAINAGE MH
- CURB INLET
- LAWN INLET
- SANITARY MH
- CLEANOUT
- BOLLARD
- SIGN
- LIGHT
- MAIL BOX
- GUY WIRE
- UTILITY POLE
- ELECTRIC MH
- CONIFEROUS TREE
- DECIDUOUS TREE
- — X — FENCE
- RAILING
- WALL
- GATE POST
- — W — WATER LINE
- — G — GAS LINE
- — E — ELECTRIC LINE
- — S — SANITARY LINE
- —OH— OVERHEAD WIRES
- ▽ DOOR LOCATION

Engineers
Landscape Architects
Land Surveyors
Planners
575 Route 28, Suite 110
Raritan, N.J. 08869
908-722-1500
Fax 908-722-7035
www.reynoldsgrp.com

The Reynolds Group Inc.

State of New Jersey
Certificate of Authorization
Number 24GA27969200
21MH00004300

F. Mitchel Ardman, P.E., P.P.
Jeffrey D. Reynolds, P.L.A.

F. Mitchel Ardman
F. MITCHEL ARDMAN
N.J. PROFESSIONAL ENGINEER LIC. NO. 34317

project

ACCESS SELF STORAGE

BLOCK 502.01, LOTS 45.01 & 46.01
297 & 305 DAVIDSON AVENUE
TOWNSHIP OF FRANKLIN
SOMERSET COUNTY, NEW JERSEY

drawing title

LIGHTING PLAN

job number 21-010	drawing number 7
scale 1"=30'	
checked by FMA	
drawn by GH	
date 08/31/2021	sheet 7 of 15

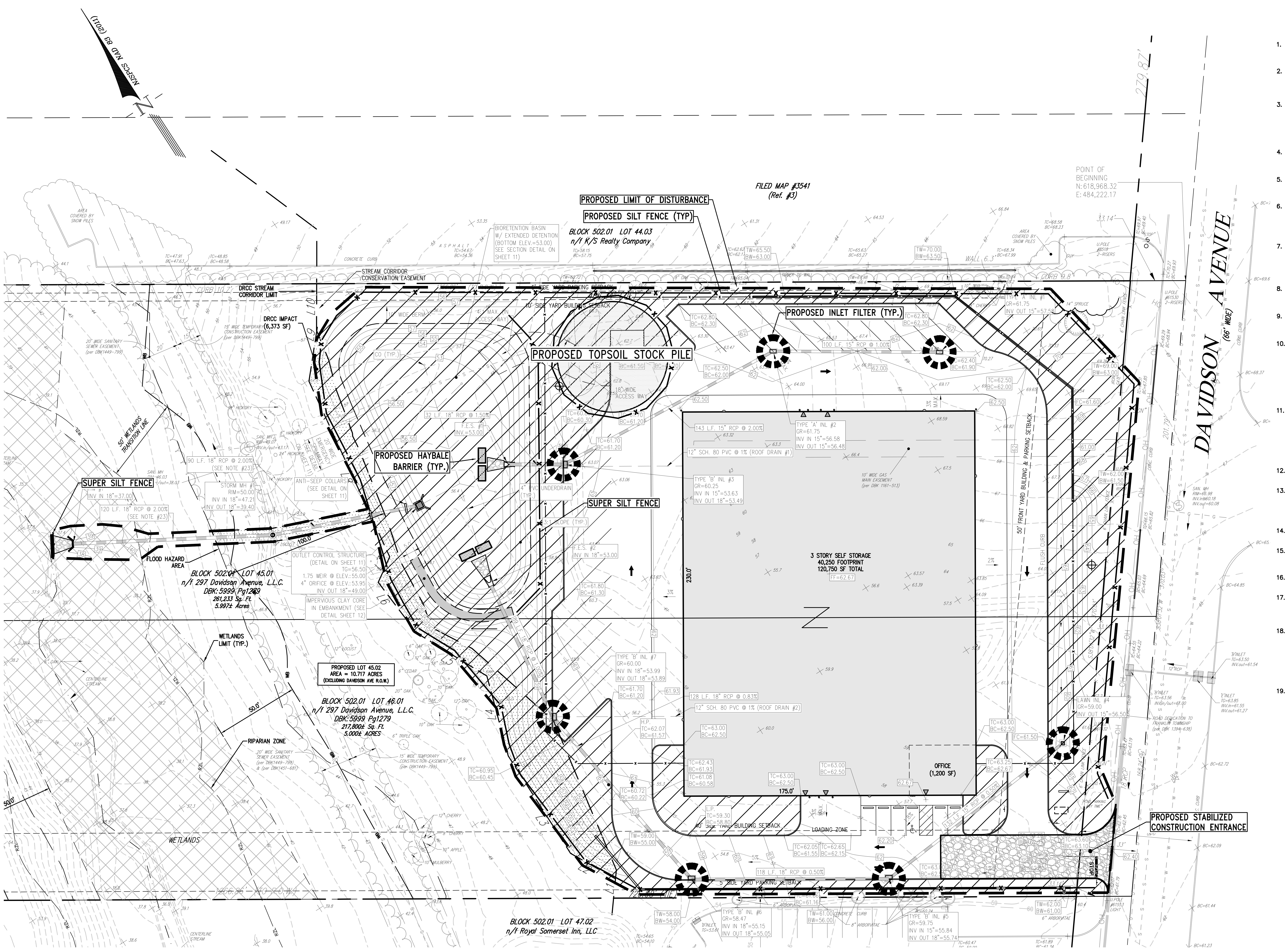
NJSPCS NAD 83 (2011)
N
FILED MAP #3541
(Ref. #3)
PROPOSED LIMIT OF DISTURBANCE
PROPOSED SILT FENCE (TYP)
BLOCK 502.01 LOT 44.03
n/f K/S Realty Company
POINT OF BEGINNING
N:618,968.32
E:484,222.17
279.87'
DAVIDSON AVENUE
(66' WIDE)
STREAM CORRIDOR CONSERVATION EASEMENT
DRCC STREAM CORRIDOR LIMIT
DRCC IMPACT (6,373 SF)
PROPOSED INLET FILTER (TYP.)
PROPOSED TOPSOIL STOCK PILE
PROPOSED HAYBALE BARRIER (TYP.)
SUPER SILT FENCE
SUPER SILT FENCE
50' WETLANDS TRANSITION LINE
FLOOD HAZARD AREA
BLOCK 502.01 LOT 45.01
n/f 297 Davidson Avenue, L.L.C.
DBK:5999 Pg1279
261,233 Sq. Ft.
5.997± Acres
OUTLET CONTROL STRUCTURE
WETLANDS LIMIT (TYP.)
PROPOSED LOT 45.02
AREA = 10.717 ACRES
(EXCLUDING DAVIDSON AVE R.O.W.)
BLOCK 502.01 LOT 46.01
n/f 297 Davidson Avenue, L.L.C.
DBK:5999 Pg1279
217,800± Sq. Ft.
5.000± ACRES
RIPARIAN ZONE
WETLANDS
3 STORY SELF STORAGE
40,250 FOOTPRINT
120,750 SF TOTAL
FF=62.67
OFFICE
(1,200 SF)
LOADING ZONE
230.0'
175.0'
50' FRONT YARD BUILDING & PARKING SETBACK
PROPOSED STABILIZED CONSTRUCTION ENTRANCE
BLOCK 502.01 LOT 47.02
n/f Royal Somerset Inn, LLC

SOIL COMPACTION TESTING AREAS
TOTAL AREA = 1.37 ACRES

▨ RECOMMENDED SOIL COMPACTION TEST AREA

LIMIT OF DISTURBANCE 152,194 SF (3.49 Ac.)

THIS PLAN TO BE USED FOR SOIL EROSION AND SEDIMENT CONTROL PURPOSES ONLY. SEE SHEET 9 FOR DETAILS

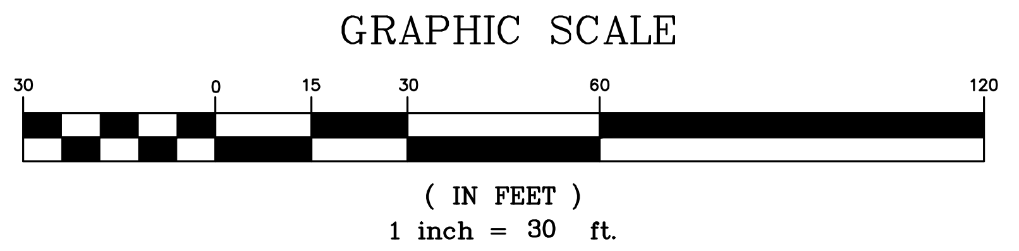
GRAPHIC SCALE
30
0
15
30
60
120
(IN FEET)
1 inch = 30 ft.

PROTECT YOURSELF

A PHONE CALL CAN BE YOUR INSURANCE POLICY

STOP – CALL BEFORE YOU DIG! GARDEN STATE UNDERGROUND LOCATION
1 – 800 – 272 – 1000

THE STATE OF NEW JERSEY REQUIRES NOTIFICATION OF EXCAVATORS, DESIGNERS, OR ANY PERSON PREPARING TO DISTURB THE EARTH'S SURFACE ANYWHERE IN THE STATE.

J: \ENGINEERING PROJECTS\2021\21-010 - 297 DAVIDSON AVE_CAD\DESIGN\21-010 BASEMAP (R2).DWG-(1/25/22)

SOIL EROSION AND SEDIMENT CONTROL NOTES

1. THE SOMERSET-UNION SOIL CONSERVATION DISTRICT SHALL BE NOTIFIED IN WRITING 48 HOURS IN ADVANCE OF ANY LAND DISTURBING ACTIVITY.
2. ALL SOIL EROSION AND SEDIMENT CONTROL PRACTICES SHALL BE INSTALLED PRIOR TO ANY MAJOR SOIL DISTURBANCES, OR IN THEIR PROPER SEQUENCE AND MAINTAINED UNTIL PERMANENT PROTECTION IS ESTABLISHED.
3. ANY DISTURBED AREAS THAT WILL BE LEFT EXPOSED MORE THAN 30 DAYS AND NOT SUBJECT TO CONSTRUCTION TRAFFIC, WILL IMMEDIATELY RECEIVE A TEMPORARY SEEDING. IF THE SEASON PREVENTS THE ESTABLISHMENT OF A TEMPORARY COVER, THE DISTURBED AREAS WILL BE MULCHED WITH STRAW, OR EQUIVALENT MATERIAL, AT A RATE OF TWO (2) TONS PER ACRE, ACCORDING TO NJ STATE STANDARDS
4. PERMANENT VEGETATION SHALL BE SEEDED OR SODDED ON ALL EXPOSED AREAS WITHIN TEN (10) DAYS AFTER FINAL GRADING. MULCH WILL BE USED FOR PROTECTION UNTIL SEEDING IS ESTABLISHED
5. ALL WORK SHALL BE DONE IN ACCORDANCE WITH THE NJ STATE STANDARDS FOR SOIL EROSION AND SEDIMENT CONTROL IN NEW JERSEY.
6. A SUB-BASE COURSE WILL BE APPLIED IMMEDIATELY FOLLOWING ROUGH GRADING AND INSTALLATION OF IMPROVEMENTS IN ORDER TO STABILIZE STREETS, ROADS, DRIVEWAYS AND PARKING AREAS. IN AREAS WHERE NO UTILITIES ARE PRESENT, THE SUB-BASE SHALL BE INSTALLED WITHIN 15 DAYS OF PRELIMINARY GRADING.
7. IMMEDIATELY FOLLOWING INITIAL DISTURBANCE OR ROUGH GRADING ALL CRITICAL AREAS SUBJECT TO EROSION (I.E.: STEEP SLOPES, ROADWAY EMBANKMENTS) WILL RECEIVE A TEMPORARY SEEDING IN COMBINATION WITH STRAW MULCH OR A SUITABLE EQUIVALENT, AT A RATE OF TWO (2) TONS PER ACRE, ACCORDING TO THE NJ STATE STANDARDS.
8. ANY STEEP SLOPES RECEIVING PIPELINE INSTALLATION WILL BE BACKFILLED AND STABILIZED DAILY, AS THE INSTALLATION PROCEEDS (I.E.: SLOPES GREATER THAT 3:1)
9. TRAFFIC CONTROL STANDARDS REQUIRE THE INSTALLATION OF A 50'X30'X6" PAD OF 1 1/2" OR 2" STONE, AT ALL CONSTRUCTION DRIVEWAYS, IMMEDIATELY AFTER INITIAL SITE DISTURBANCE.
10. AT THE TIME WHEN THE SITE PREPARATION FOR PERMANENT VEGETATIVE STABILIZATION IS GOING TO BE ACCOMPLISHED, ANY SOIL THAT WILL NOT PROVIDE A SUITABLE ENVIRONMENT TO SUPPORT ADEQUATE VEGETATIVE GROUND COVER, SHALL BE REMOVED OR TREATED IN SUCH A WAY THAT WILL PERMANENTLY ADJUST THE SOIL CONDITIONS AND RENDER IT SUITABLE FOR VEGETATIVE GROUND COVER. IF THE REMOVAL OR TREATMENT OF THE SOIL WILL NOT PROVIDE SUITABLE CONDITIONS, NON-VEGETATIVE MEANS OF PERMANENT GROUND STABILIZATION WILL HAVE TO BE EMPLOYED.
11. IN THAT NJSA 4:24-39 ET SEQ., REQUIRES THAT NO CERTIFICATE OF OCCUPANCY BE ISSUED BEFORE THE PROVISIONS OF THE CERTIFIED PLAN FOR SOIL EROSION AND SEDIMENT CONTROL HAVE BEEN COMPLIED WITH FOR PERMANENT MEASURES, ALL SITE WORK FOR SITE PLANS AND ALL WORK AROUND INDIVIDUAL LOTS IN SUBDIVISIONS, WILL HAVE TO BE COMPLETED PRIOR TO THE DISTRICT ISSUING A REPORT OF COMPLIANCE FOR THE ISSUANCE OF A CERTIFICATE OF OCCUPANCY BY THE MUNICIPALITY.
12. CONDUIT OUTLET PROTECTION MUST BE INSTALLED AT ALL REQUIRED OUTFALLS PRIOR TO THE DRAINAGE SYSTEM BECOMING OPERATIONAL.
13. ANY CHANGES TO THE CERTIFIED SOIL EROSION AND SEDIMENT CONTROL PLAN WILL REQUIRE THE SUBMISSION OF REVISED SOIL EROSION AND SEDIMENT CONTROL PLANS TO THE DISTRICT FOR RE-CERTIFICATION. THE REVISED PLANS MUST MEET ALL CURRENT NJ STATE SOIL EROSION & SEDIMENT CONTROL STANDARDS.
14. THE SOMERSET-UNION SOIL CONSERVATION DISTRICT SHALL BE NOTIFIED OF ANY CHANGES IN OWNERSHIP.
15. MULCHING TO THE NJ STANDARDS IS REQUIRED FOR OBTAINING A CONDITIONAL REPORT OF COMPLIANCE. CONDITIONALS ARE ONLY ISSUED WHEN THE SEASON PROHIBITS SEEDING.
16. CONTRACTOR IS RESPONSIBLE FOR KEEPING ALL ADJACENT ROADS CLEAN DURING LIFE OF CONSTRUCTION PROJECT.
17. THE DEVELOPER SHALL BE RESPONSIBLE FOR REMEDIATING ANY EROSION OR SEDIMENT PROBLEMS THAT ARISE AS A RESULT OF ONGOING CONSTRUCTION AT THE REQUEST OF THE SOMERSET-UNION SOIL CONSERVATION DISTRICT.
18. HYDRO SEEDING IS A TWO- STEP PROCESS. THE FIRST STEP INCLUDES SEED, FERTILIZER, LIME, ETC., ALONG WITH MINIMAL AMOUNTS OF MULCH TO PROMOTE CONSISTENCY, GOOD SEED TO SOIL CONTACT, AND GIVE A VISUAL INDICATION OF COVERAGE. UPON COMPLETION OF SEEDING OPERATION, HYDRO-MULCH SHOULD BE APPLIED AT A RATE OF 1500 LBS. PER ACRE IN SECOND STEP. THE USE OF HYDRO-MULCH, AS OPPOSED TO STRAW, IS LIMITED TO OPTIMUM SEEDING DATES AS LISTED IN THE NJ STANDARDS.
19. UNFILTERED DEWATERING IS NOT PERMITTED. NECESSARY PRECAUTIONS MUST BE TAKEN DURING ALL DEWATERING OPERATIONS TO MINIMIZE SOIL TRANSFER. ANY DEWATERING METHODS USED MUST BE IN ACCORDANCE WITH THE STANDARD FOR DEWATERING.

revisions

no.	date	description
1	10/12/21	PER SCD & TWP COMMENTS/NJDEP PERMIT PLAN
2	01/17/22	PER DEP, DRCC & COUNTY COMMENTS

LEGEND

⋈	GAS VALVE
Ⓖ	GAS METER
⋈	WATER VALVE
☼	HYDRANT
Ⓦ	WATER METER
CS ⊕	CURB STOP
FDC ∘	FIRE DEPT. CONNECTION
Ⓓ	DRAINAGE MH
▬	CURB INLET
▤	LAWN INLET
Ⓢ	SANITARY MH
C.O. ○	CLEANOUT
∘	BOLLARD
∘S	SIGN
☼	LIGHT
Ⓜ	MAIL BOX
⊸	GUY WIRE
⊖	UTILITY POLE
Ⓔ	ELECTRIC MH
⊙	CONIFEROUS TREE
⊙	DECIDUOUS TREE
— X —	FENCE
∘—∘	RAILING
▭	WALL
◉	GATE POST
— W —	WATER LINE
— G —	GAS LINE
— E —	ELECTRIC LINE
— S —	SANITARY LINE
— OH —	OVERHEAD WIRES
▼	DOOR LOCATION

Engineers
Landscape Architects
Land Surveyors
Planners
575 Route 28, Suite 110
Raritan, N.J. 08869
908-722-1500
Fax 908-722-7035
www.reynoldsgrp.com

The Reynolds Group Inc.

State of New Jersey
Certificate of Authorization
Number 24GA27969200
21MH00004300

F. Mitchel Ardman, P.E., P.P.
Jeffrey D. Reynolds, P.L.A.

F Mitchel Ardman
F. MITCHEL ARDMAN
N.J. PROFESSIONAL ENGINEER LIC. NO. 34317

project

ACCESS SELF STORAGE

BLOCK 502.01, LOTS 45.01 & 46.01
297 & 305 DAVIDSON AVENUE
TOWNSHIP OF FRANKLIN
SOMERSET COUNTY, NEW JERSEY

drawing title

SOIL EROSION & SEDIMENT CONTROL PLAN

job number 21-010	drawing number 8
scale 1"=30'	
checked by FMA	
drawn by GH	
date 08/31/2021	sheet 8 of 15

STABILIZED CONSTRUCTION ACCESS

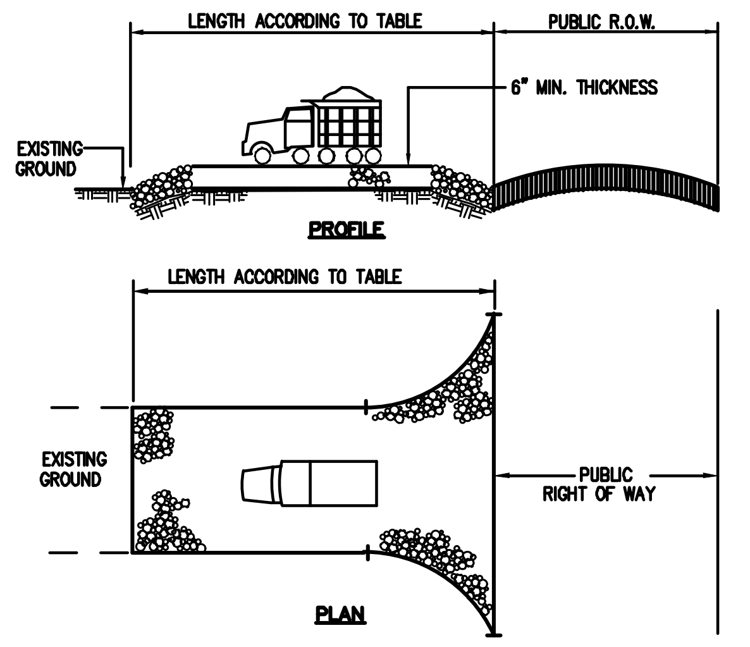

*NOTE: INDIVIDUAL LOT ACCESS POINTS MAY REQUIRE STABILIZATION THICKNESS SHOWN IS FOR STONE CONSTRUCTION ENTRANCE ONLY (TYP.)

PERCENT SLOPE OF ROADWAY	LENGTH OF STONE REQUIRED	
	COARSE GRAINED SOILS	FINE GRAINED SOILS
0 TO 2%	50 FT.	100 FT.
2 TO 5%	100 FT.	200 FT.
>5%	ENTIRE SURFACE STABILIZED WITH HMA BASE COURSE, MIX I-2, OR AS DIRECTED BY LOCAL GOVERNMENT	

Permanent Seeding Table

PERMANENT VEGETATIVE MIXTURES, PLANTING RATES AND PLANTING DATES													
SEED MIXTURE	PLANTING RATE[1]		PLANTING DATES O=Optimum Planting period A=Acceptable Planting period									MAINTENANCE LEVEL[2]	REMARKS
			PLANT HARDINESS ZONES[3]										
			Zone 5b,6a			Zone 6b			Zone 7a,7b				
	lbs/ac.	lbs/1000 s.f.	3/15–5/31	6/1–7/31	8/1–10/31	3/1–4/30	5/1–8/14	8/15–11/15	2/1–4/30	5/1–8/14	8/15–11/30		
COOL SEASON SEED MIXTURES													
1. Turf–type Tall Fescue Rebel 2000 (30%) Coyote (30%) Master Piece (30%) Perennial rye grass (10%)	150	3.5	O	A	O	O	A	O	O	A	O	C–D	Use in a managed filter strip for nutrient uptake.

1. Seeding rates specified are required when a report of compliance is requested prior to actual establishment of permanent vegetation. Up to 50% reduction in rates may be used when permanent vegetation is established prior to a report of compliance inspection. These rates apply to all methods of seeding. Establishing permanent vegetation means 80% vegetative coverage of the seeded area and mowed once. Grass seed mixture checked by the State Seed Analyst, New Jersey Department of Agriculture, Trenton, New Jersey, will assure the purchaser that the mixture obtained is the mixture ordered, pursuant to the N.J. State Seed Law, N.J.S.A. 4:*–17.13 et. seq.
2. Maintenance Level:
   - A. Intensive mowing (2–4 days), fertilization, lime, pest control and irrigation (Examples–high maintenance lawns, commercial and recreation areas, public facilities).
   - B. Frequent mowing (4–7 days), occasional fertilization, lime and weel control (Examples–home lawns, commercial sites, school sites).
   - C. Periodic mowing (7–14 days), occasional fertilization and lime (Examples–home lawns, parks).
   - D. Infrequent or no mowing, fertilization and lime the first year of establishment (Examples–roadsides, recreation areas, public open spaces).
3. Project is in Plant Hardiness Zone 6b.

Temporary Seeding Table

Temporary Vegetative Stabilization Grasses, Seeding Rates, Dates and Depth						
SEED SELECTIONS	SEEDING RATE[1] (pounds)		OPTIMUM SEEDING RATE [2] [3] Based on Plant Hardiness Zone			OPTIMUM SEED DEPTH[4] (inches)
	Per Acre	Per 1000 Sq. Ft.	ZONE 5b,6a	ZONE 6b	ZONE 7a,b	
COOL SEASON GRASSES						
1. Perennial ryegrass	100	1.0	3/15–6/1 8/1–9/15	3/1–5/15 8/15–10/1	2/15–5/1 8/15–10/15	0.5
2. Spring oats	86	2.0	3/15–6/1	3/1–5/15 8/15–10/1	2/15–5/1 8/15–10/15	1.0
3. Winter Barley	96	2.2	8/1–9/15	8/15–10/1	8/15–10/15	1.0
4. Annual Ryegrass	100	1.0	3/15–6/1 8/1–9/15	3/1–6/1 8/1–9/15	2/15–5/1 8/15–10/15	0.5
5. Winter Cereal Rye	112	2.8	8/1–11/1 8/1–9/15	8/1–11/15	8/1–12/15	1.0
WARM SEASON GRASSES						
6. Pearl millet	20	0.5	6/1–8/1	5/15–8/15	5/1–9/1	1.0
7. Millet (German or Hungarian)	30	0.7	6/1–8/1	5/15–8/15	5/1–9/1	1.0

1. Seeding rate for warm season grass, selections 6–7 shall be adjusted to reflect the amount of Pure Line Seed (PLS) as determined by a germination test result. No adjustment is required for cool season grasses.
2. May be planted throughout summer if soil moisture is adequate or seeded area can be irrigated.
3. Project is in Plant Hardiness Zone 6b.
4. Twice the depth for sandy soils.

RIP RAP APRON

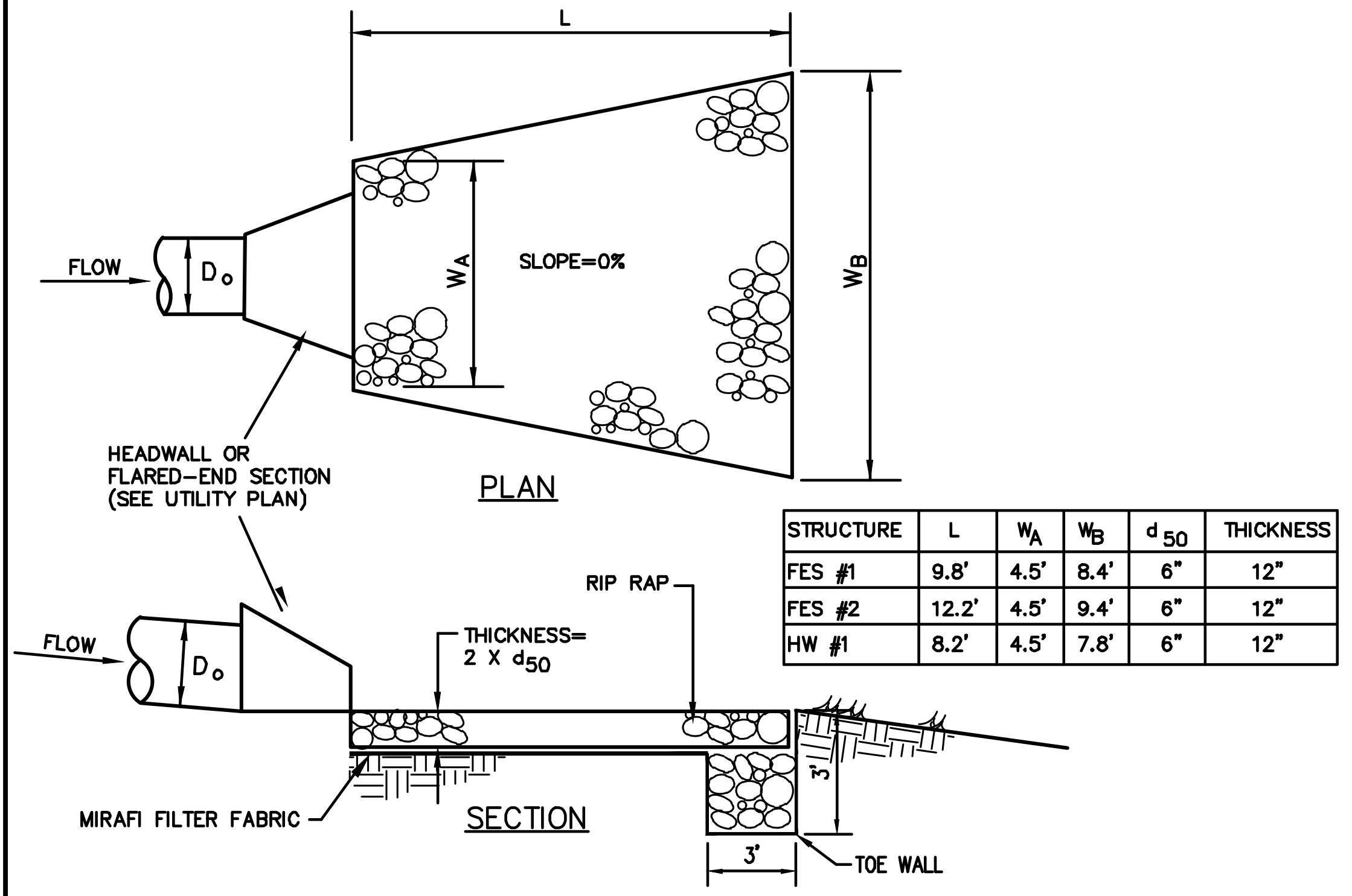

STRUCTURE	L	W_A	W_B	d_{50}	THICKNESS
FES #1	9.8'	4.5'	8.4'	6"	12"
FES #2	12.2'	4.5'	9.4'	6"	12"
HW #1	8.2'	4.5'	7.8'	6"	12"

revisions		
no.	date	description
1	10/12/21	PER SCD & TWP COMMENTS/NJDEP PERMIT PLAN
2	01/17/22	PER DEP, DRCC & COUNTY COMMENTS

LEGEND

G⋈	GAS VALVE
Ⓖ	GAS METER
W⋈	WATER VALVE
☼	HYDRANT
Ⓦ	WATER METER
CS ⊕	CURB STOP
FDC ○	FIRE DEPT. CONNECTION
Ⓓ	DRAINAGE MH
▬	CURB INLET
▤	LAWN INLET
Ⓢ	SANITARY MH
C.O. ○	CLEANOUT
○	BOLLARD
○S	SIGN
☼	LIGHT
Ⓜ	MAIL BOX
⊸	GUY WIRE
—⊖—	UTILITY POLE
Ⓔ	ELECTRIC MH
⊙	CONIFEROUS TREE
⊙	DECIDUOUS TREE
— X —	FENCE
—○——○—	RAILING
▭	WALL
◉	GATE POST
— W —	WATER LINE
— G —	GAS LINE
— E —	ELECTRIC LINE
— S —	SANITARY LINE
—OH—	OVERHEAD WIRES

INLET FILTERS

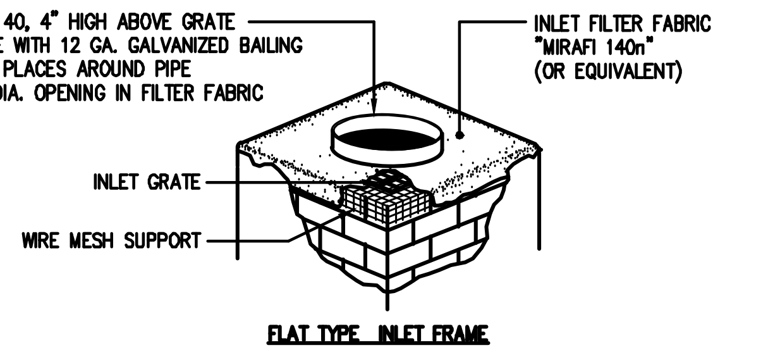
12" PVC, SCH 40, 4" HIGH ABOVE GRATE GRATE SECURE WITH 12 GA. GALVANIZED BAILING WIRE IN FOUR PLACES AROUND PIPE PROVIDE 12" DIA. OPENING IN FILTER FABRIC
INLET FILTER FABRIC "MIRAFI 140n" (OR EQUIVALENT)
INLET GRATE
WIRE MESH SUPPORT

FLAT TYPE INLET FRAME

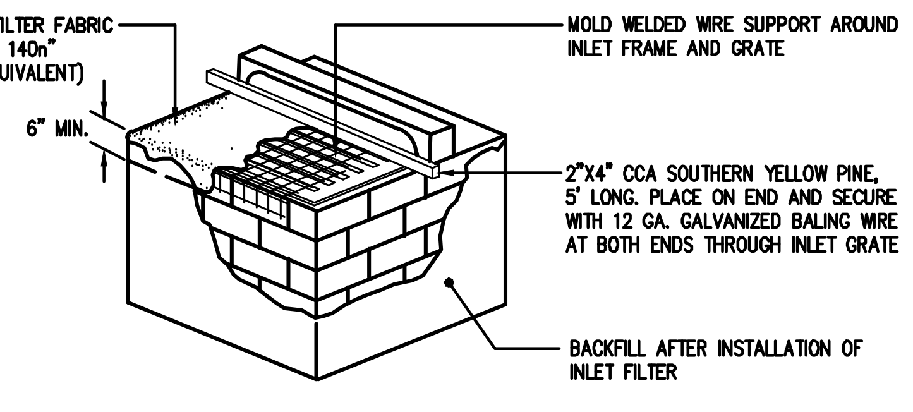
INLET FILTER FABRIC "MIRAFI 140n" (OR EQUIVALENT)
6" MIN.
MOLD WELDED WIRE SUPPORT AROUND INLET FRAME AND GRATE
2"X4" CCA SOUTHERN YELLOW PINE, 5' LONG. PLACE ON END AND SECURE WITH 12 GA. GALVANIZED BALING WIRE AT BOTH ENDS THROUGH INLET GRATE
BACKFILL AFTER INSTALLATION OF INLET FILTER

CURB TYPE INLET FRAME

GENERAL NOTES:

1. CONTRACTOR TO CLEAN INLET FILTER AFTER EVERY STORM.
2. FILTER FABRIC, WOOD PIECE OR PVC PIPE TO BE REMOVED AFTER PAVING OR FINAL GRADING AND ESTABLISHMENT OF VEGETATION.

SOIL COMPACTION TESTING AND MITIGATION REQUIREMENTS

SOIL COMPACTION TESTING REQUIREMENTS

1. SUBGRADE SOILS PRIOR TO THE APPLICATION OF TOPSOIL (SEE PERMANENT SEEDING AND STABILIZATION NOTES FOR TOPSOIL REQUIREMENTS) SHALL BE FREE OF EXCESSIVE COMPACTION TO A DEPTH OF 6.0 INCHES TO ENHANCE THE ESTABLISHMENT OF PERMANENT VEGETATIVE COVER.

2. AREAS OF THE SITE WHICH ARE SUBJECT TO COMPACTION TESTING AND/OR MITIGATION ARE GRAPHICALLY DENOTED ON THE CERTIFIED SOIL EROSION CONTROL PLAN.

3. COMPACTION TESTING LOCATIONS ARE DENOTED ON THE PLAN. A COPY OF THE PLAN OR PORTION OF THE PLAN SHALL BE USED TO MARK LOCATIONS OF TESTS, AND ATTACHED TO THE COMPACTION REMEDIATION FORM, AVAILABLE FROM THE LOCAL SOIL CONSERVATION DISTRICT. THIS FORM MUST BE FILLED OUT AND SUBMITTED PRIOR TO RECEIVING A CERTIFICATE OF COMPLIANCE FROM THE DISTRICT.

4. IN THE EVENT THAT TESTING INDICATES COMPACTION IN EXCESS OF THE MAXIMUM THRESHOLDS INDICATED FOR THE SIMPLIFIED TESTING METHODS (SEE DETAILS BELOW), THE CONTRACTOR/OWNER SHALL HAVE THE OPTION TO PERFORM EITHER (1) COMPACTION MITIGATION OVER THE ENTIRE MITIGATION AREA DENOTED ON THE PLAN (EXCLUDING EXEMPT AREAS), OR (2) PERFORM ADDITIONAL, MORE DETAILED TESTING TO ESTABLISH THE LIMITS OF EXCESSIVE COMPACTION WHEREUPON ONLY THE EXCESSIVELY COMPACTED AREAS WOULD REQUIRE COMPACTION MITIGATION. ADDITIONAL DETAILED TESTING SHALL BE PERFORMED BY A TRAINED, LICENSED PROFESSIONAL.

COMPACTION TESTING METHODS

- A. PROBING WIRE TEST (SEE DETAIL BELOW)
- B. HAND–HELD PENETROMETER TEST (SEE DETAIL BELOW)
- C. TUBE BULK DENSITY TEST (LICENSED PROFESSIONAL ENGINEER REQUIRED)
- D. NUCLEAR DENSITY TEST (LICENSED PROFESSIONAL ENGINEER REQUIRED)

NOTE: ADDITIONAL TESTING METHODS WHICH CONFORM TO ASTM STANDARDS AND SPECIFICATIONS, AND WHICH PRODUCE A DRY WEIGHT, SOIL BULK DENSITY MEASUREMENT MAY BE ALLOWED SUBJECT TO DISTRICT APPROVAL.

SOIL COMPACTION TESTING IS NOT REQUIRED IF/WHEN SUBSOIL COMPACTION REMEDIATION (SCARIFICATION/TILLAGE (6" MINIMUM DEPTH) OR SIMILAR) IS PROPOSED AS PART OF THE SEQUENCE OF CONSTRUCTION.

PROCEDURES FOR SOIL COMPACTION MITIGATION

PROCEDURES SHALL BE USED TO MITIGATE EXCESSIVE SOIL COMPACTION PRIOR TO PLACEMENT OF TOPSOIL AND ESTABLISHMENT OF PERMANENT VEGETATIVE COVER.

RESTORATION OF COMPACTED SOILS SHALL BE THROUGH DEEP SCARIFICATION/TILLAGE (6" MINIMUM DEPTH) WHERE THERE IS NO DANGER TO UNDERGROUND UTILITIES (CABLES, IRRIGATION SYSTEMS, ETC.). IN THE ALTERNATIVE, ANOTHER METHOD AS SPECIFIED BY A NEW JERSEY LICENSED PROFESSIONAL ENGINEER MAYBE SUBSTITUTED SUBJECT TO DISTRICT APPROVAL.

NOTE: SOIL SHOULD BE MOIST BUT NOT SATURATED. DO NOT EST WHEN SOIL IS EXCESSIVELY DRY OR SUBJECT TO FREEZING TEMPERATURES. SLOW, STEADY DOWNWARD PRESURE USED TO ADVANCE THE WIRE.

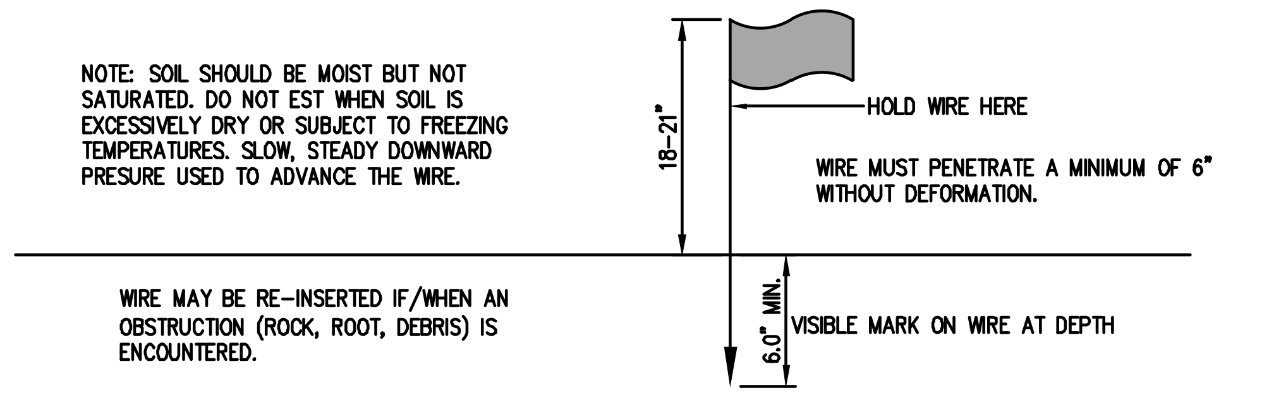
18–21"
HOLD WIRE HERE
WIRE MUST PENETRATE A MINIMUM OF 6" WITHOUT DEFORMATION.
6.0" MIN.
VISIBLE MARK ON WIRE AT DEPTH

WIRE MAY BE RE–INSERTED IF/WHEN AN OBSTRUCTION (ROCK, ROOT, DEBRIS) IS ENCOUNTERED.

PROBING WIRE TEST-15.5 GA STEEL WIRE (SURVEY FLAG)

NOTE: SOIL SHOULD BE MOIST BUT NOT SATURATED. DO NOT TEST WHEN SOIL IS EXCESSIVELY DRY OR SUBJECT TO FREEZING TEMPERATURES. SLOW, STEADY DOWNWARD PRESSURE USED TO ADVANCE THE PROBE. PROBE MUST PENETRATE AT LEAST 6" WITH LESS THAN 300 PSI READING ON THE GAGE.

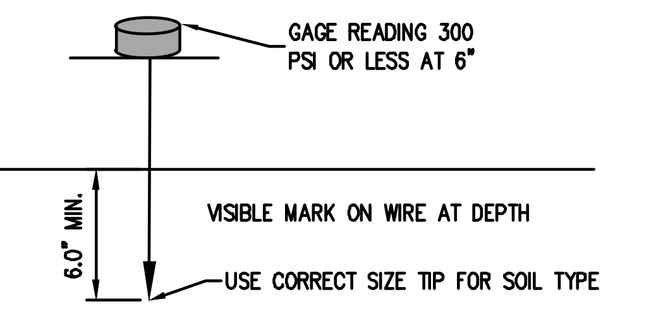
GAGE READING 300 PSI OR LESS AT 6"
6.0" MIN.
VISIBLE MARK ON WIRE AT DEPTH
USE CORRECT SIZE TIP FOR SOIL TYPE

PENETROMETER MAY BE RE–INSERTED IF/WHEN AN OBSTRUCTION (ROCK, ROOT, DEBRIS) IS ENCOUNTERED.

HANDHELD SOIL PENETROMETER TEST

SILT FENCE SEDIMENT BARRIER

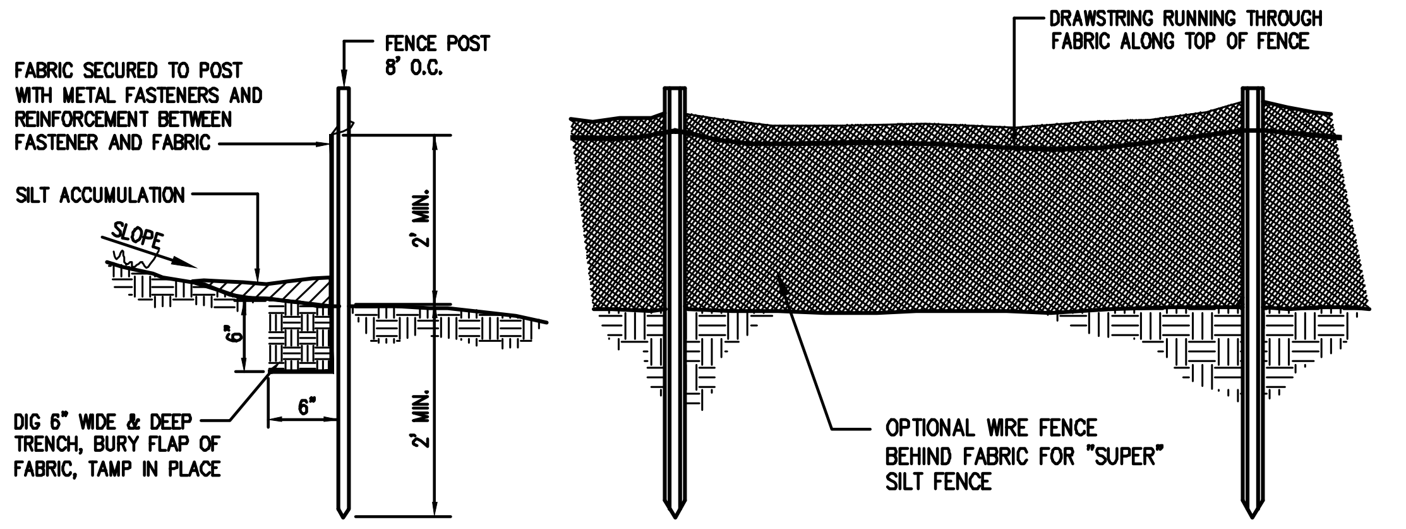
FABRIC SECURED TO POST WITH METAL FASTENERS AND REINFORCEMENT BETWEEN FASTENER AND FABRIC
FENCE POST 8' O.C.
SILT ACCUMULATION
SLOPE
2' MIN.
6"
6"
2' MIN.
DIG 6" WIDE & DEEP TRENCH, BURY FLAP OF FABRIC, TAMP IN PLACE
DRAWSTRING RUNNING THROUGH FABRIC ALONG TOP OF FENCE
OPTIONAL WIRE FENCE BEHIND FABRIC FOR "SUPER" SILT FENCE

ROOT PROTECTION FENCING

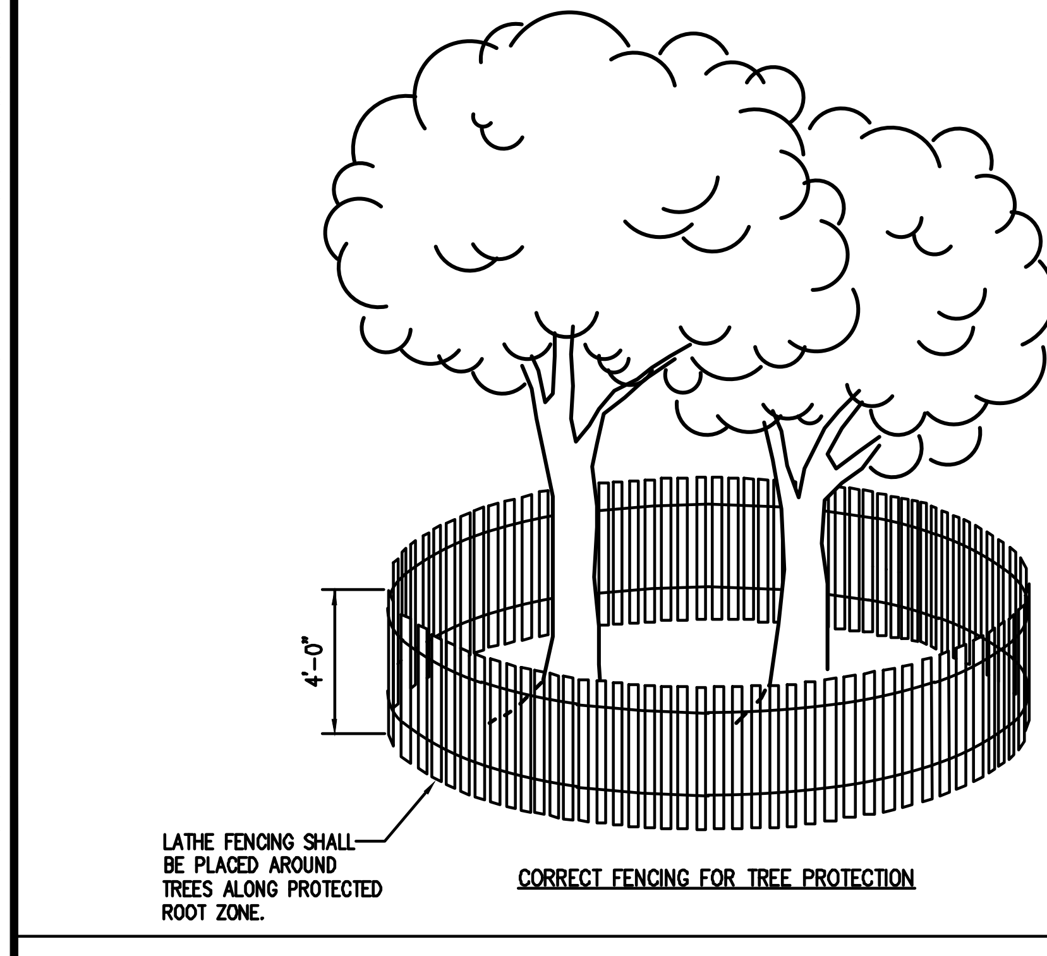
4'-0"
LATHE FENCING SHALL BE PLACED AROUND TREES ALONG PROTECTED ROOT ZONE.

CORRECT FENCING FOR TREE PROTECTION

ESTIMATE A TREE'S PROTECTED ROOT ZONE (PRZ) BY CALCULATING THE CRITICAL ROOT RADIUS (CRR).

1. MEASURE THE DBH (DIAMETER OF TREE AT BREAST HEIGHT, 4.5 FEET ABOVE GROUND ON THE UPHILL SIDE OF TREE) IN INCHES.
2. MULTIPLY MEASURED DBH BY 1.5 OR 1.0. EXPRESS THE RESULT IN FEET.

DBH X 1.5: CRITICAL ROOT RADIUS FOR OLDER, UNHEALTHY, OR SENSITIVE SPECIES.

DBH X 1.0: CRITICAL ROOT RADIUS FOR YOUNGER, HEALTHY OR TOLERANT SPECIES.

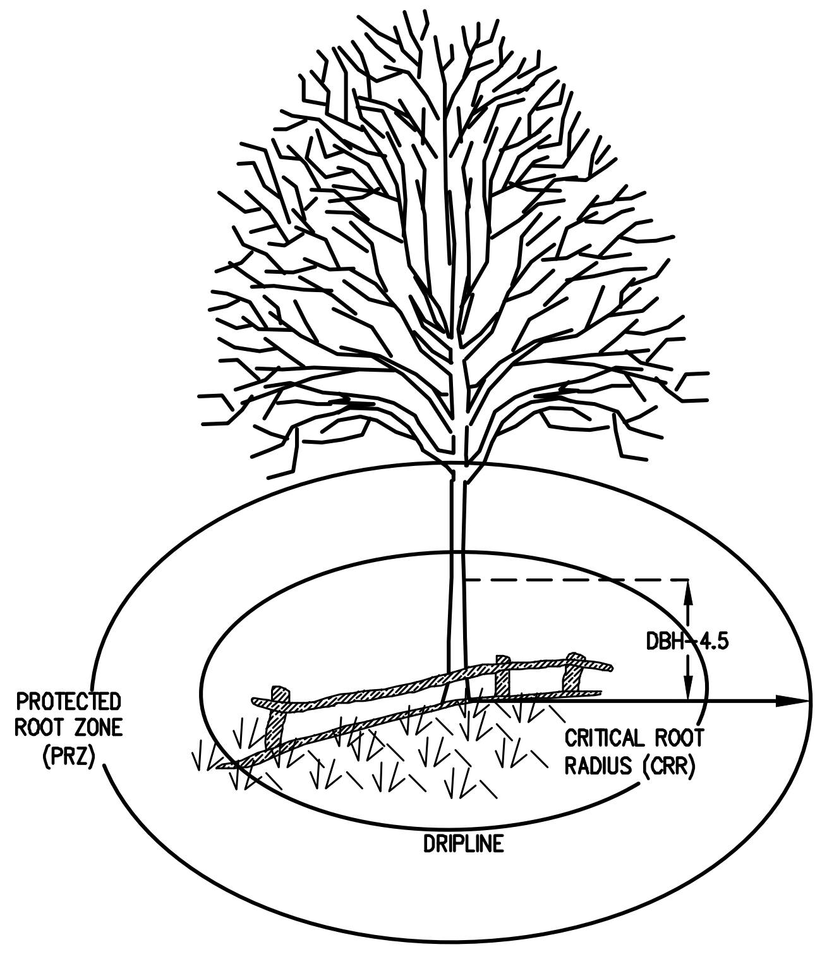

TOPSOIL STOCKPILE

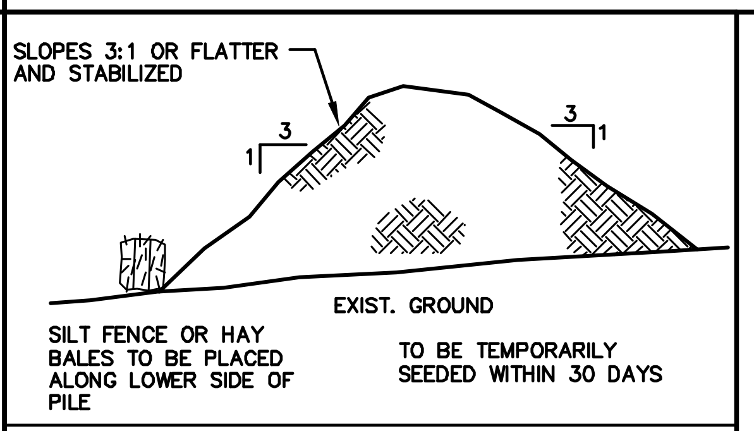
SLOPES 3:1 OR FLATTER AND STABILIZED
3
1
3
1
EXIST. GROUND
SILT FENCE OR HAY BALES TO BE PLACED ALONG LOWER SIDE OF PILE
TO BE TEMPORARILY SEEDED WITHIN 30 DAYS

CONSTRUCTION SEQUENCE

SEQUENCE #	DESCRIPTION OF CONSTRUCTION ACTIVITY	TIME (WEEKS)
1	INSTALL PERIMITER SEDIMENT BARRIER, SILT FENCE, STABILIZED CONSTRUCTION ENTRANCE AND OTHER SOIL EROSION MEASURES INCLUDING TREE PROTECTION FENCING WHERE SHOWN ON PLANS AND MAINTAIN THROUGHOUT THE COURSE OF CONSTRUCTION.	1
2	CLEAR AND GRUB VEGETATED AREAS. STRIP TOPSOIL IN CONSTRUCTION AREAS AND STOCKPILE WHERE INDICATED ON THE PLANS. INSTALL SILT FENCE AT DOWNSLOPE OF STOCKPILE. COMMENCE PRELIMINARY GRADING OPERATIONS.	2
3	SELECTIVELY DEMOLISH SITE ITEMS AS NOTED ON PLANS.	1
4	BEGIN CONSTRUCTION DETENTION BASIN. INITIALLY EXCAVATE TO PROPOSED SURFACE ELEV. OF BASIN BOTTOM (OR WITHIN 1 FOOT). ONCE DRAINAGE AREA STABILIZED, EXCAVATE THE BOTTOM FOR SAND FILTER AND UNDERDRAIN INSTALLATION.	2
5	BEGIN CONSTRUCTION STORM SEWER SYSTEM. INSTALL INLET FILTERS. DO NOT CONNECT TO DETENTION BASIN UNTIL FINALIZED.	2
6	BEGIN BUILDING CONSTRUCTION.	30
7	CONSTRUCT UTILITIES INCLUDING SANITARY SEWER, SEPTIC, AND WATER LINES, GAS AND ELECTRIC.	4
8	CONSTRUCT CURB AND PAVEMENT BASE COURSE.	4
9	CONSTRUCT REMAINING SITE AMENITIES, INSTALL SIGNS, COMMENCE FINAL GRADING.	2
10	INSTALL LANDSCAPING AND PERMANENTLY STABILIZE AREAS WITH VEGETATION.	2
11	INSTALL PAVEMENT SURFACE COURSE.	1
12	WHEN SITE IS COMPLETELY AND PERMANENTLY STABILIZED, REMOVE SOIL EROSION CONTROL MEASURES.	1

NOTE:

1. THE ABOVE SEQUENCES WILL OVERLAP. EACH SEQUENCE MAY COMMENCE PRIOR TO THE COMPLETION OF THE PREVIOUS SEQUENCE. ACTUAL CONSTRUCTION TIME MAY VARY.
2. CONTRACTOR TO PROVIDE MONTHYL INSPECTION AND REPAIR OF ALL SOIL EROSION MEASURES AND SHALL PROVIDE ROAD SWEEPING AS REQUIRED OR DIRECTED BY OWNER.

STANDARD FOR PERMANENT AND TEMPORARY VEGETATIVE COVER FOR SOIL STABILIZATION

1. SITE PREPARATION:

A. GRADE AS NEEDED AND FEASIBLE TO PERMIT THE USE OF CONVENTIONAL EQUIPMENT FOR SEEDBED PREPARATION, SEEDING, MULCH APPLICATION, AND MULCH ANCHORING. ALL GRADING SHOULD BE DONE IN ACCORDANCE WITH STANDARDS FOR LAND GRADING.

B. IMMEDIATELY PRIOR TO SEEDING AND TOPSOIL APPLICATION, THE SUBSOIL SHALL BE EVALUATED FOR COMPACTION IN ACCORDANCE WITH STANDARDS FOR LAND GRADING.

C. TOPSOIL SHALL BE HANDLED ONLY WHEN IT IS DRY ENOUGH TO WORK WITHOUT DAMAGING THE SOIL STRUCTURE. A UNIFORM APPLICATION TO A DEPTH OF 5 INCHES (UNSETTLED) IS REQUIRED ON ALL SITES. TOPSOIL SHALL BE AMENDED WITH ORGANIC MATTER, AS NEEDED, IN ACCORDANCE WITH THE STANDARD FOR TOPSOILING.

D. INSTALL NEEDED EROSION CONTROL PRACTICES FOR FACILITIES SUCH AS DIVERSIONS, GRADE STABILIZATION STRUCTURES, CHANNEL STABILIZATION MEASURES, SEDIMENT BASINS, AND WATERWAYS IN ACCORDANCE WITH STATE STANDARDS.

2. SEEDBED PREPARATION:

A. UNIFORMLY APPLY GROUND LIMESTONE AND FERTILIZER TO TOPSOIL WHICH HAS BEEN SPREAD AND FIRMED, ACCORDING TO SOIL TEST RECOMMENDATIONS SUCH AS OFFERED BY RUTGERS CO–OPERATIVE EXTENSION. SOIL SAMPLE MAILERS ARE AVAILABLE FROM THE LOCAL RUTGERS COOPERATIVE EXTENSION OFFICES. FERTILIZER SHALL BE APPLIED AT THE RATE OF 500 POUNDS PER ACRE OR 11 POUNDS PER 1,000 SQUARE FEET OF 10–10–10 (PERMANENT) AND 10–20–10 (TEMPORARY) OR EQUIVALENT WITH 50% WATER INSOLUBLE NITROGEN UNLESS A SOIL TEST INDICATES OTHERWISE AND INCORPORATED INTO THE SURFACE 4 INCHES. IF FERTILIZER IS NOT INCORPORATED, APPLY ONE–HALF THE RATE DESCRIBED ABOVE DURING SEEDBED PREPARATION AND REPEAT ANOTHER ONE–HALF RATE APPLICATION OF THE SAME FERTILIZER WITHIN 3 TO 5 WEEKS AFTER SEEDING.

B. WORK LIME AND FERTILIZER INTO THE TOPSOIL AS NEARLY AS PRACTICAL TO A DEPTH OF 4 INCHES WITH A DISC, SPRINGTOOTH HARROW, OR OTHER SUITABLE EQUIPMENT. THE FINAL HARROWING OR DISKING OPERATION SHOULD BE ON THE GENERAL CONTOUR. CONTINUE TILLAGE UNTIL A REASONABLE UNIFORM SEEDBED IS PREPARED. HIGH ACID PRODUCING SOIL.

C. SOILS HAVING A PH OF 4 OR LESS OR CONTAINING IRON SULFIDE SHALL BE COVERED WITH A MINIMUM OF 12 INCHES OF SOIL HAVING A PH OF 5 OR MORE BEFORE INITIATING SEEDBED PREPARATION. IN ACCORDANCE WITH THE STANDARD FOR MANAGEMENT OF HIGH ACID PRODUCING SOILS.

3. SEEDING:

A. PERMANENT SEEDING: USE MIXTURE SHOWN IN THE PERMANENT SEEDING TABLE OR USE MIXTURE RECOMMENDED BY RUTGERS COOPERATIVE EXTENSION OR NATURAL RESOURCES CONSERVATION SERVICE WHICH IS APPROVED BY THE SOIL CONSERVATION DISTRICT. SEED GERMINATION SHALL HAVE BEEN TESTED WITHIN 12 MONTHS OF THE PLANTING DATE. NO SEED SHALL BE ACCEPTED WITH A GERMINATION TEST DATE MORE THAN 12 MONTHS OLD UNLESS RETESTED.

1. SEEDING RATES SPECIFIED ARE REQUIRED WHEN A REPORT OF COMPLIANCE IS REQUESTED PRIOR TO ACTUAL ESTABLISHMENT OF PERMANENT VEGETATION UP TO 50% REDUCTION IN RATES MAY BE USED WHEN PERMANENT VEGETATION IS ESTABLISHED PRIOR TO A REPORT OF COMPLIANCE INSPECTION. THESE RATES APPLY TO ALL METHODS OF SEEDING. ESTABLISHING PERMANENT VEGETATION MEANS 80% VEGETATIVE COVERAGE WITH THE SPECIFIED SEED MIXTURE FOR THE SEEDED AREA AND MOWED ONCE.

2. WARM SEASON MIXTURES ARE GRASSES AND LEGUMES WHICH MAXIMIZE GROWTH AT HIGH TEMPERATURES, GENERALLY 85°F AND ABOVE. SEE PERMANENT SEEDING TABLE. PLANTING RATES FOR WARM SEASON GRASSES SHALL BE AMOUNT OF PURE LIVE SEED (PLS) AS DETERMINED BY GERMINATING TESTING RESULTS.

3. COOL SEASON MIXTURES ARE GRASSES AND LEGUMES WHICH MAXIMIZE GROWTH AT TEMPERATURES BELOW 85°F. MANY GRASSES BECOME ACTIVE AT 65°F. ADJUSTMENT OF PLANTING RATES TO COMPENSATE FOR THE AMOUNT OF PURE LIVE SEED IS NOT REQUIRED FOR COOL SEASON GRASSES.

TEMPORARY SEEDING: TEMPORARY VEGETATIVE COVER SHALL BE ESTABLISHED ON SOILS EXPOSED FOR PERIODS OF 2 TO 6 MONTHS WHICH ARE NOT BEING GRADED, NOT UNDER ACTIVE CONSTRUCTION, OR NOT SCHEDULED FOR PERMANENT SEEDING WITHIN 60 DAYS. SELECT A SEED FROM THE TEMPORARY VEGETATIVE SEEDING TABLE.

B. CONVENTIONAL SEEDING IS PERFORMED BY APPLYING SEED UNIFORMLY BY HAND, CYCLONE (CENTRIFUGAL) SEEDER, DROP SEEDER, DRILL OR CULTIPACKER SEEDER. EXCEPT FOR DRILLED, HYDROSEEDED OR CULTIPACKED SEEDINGS, SEED SHALL BE INCORPORATED INTO THE SOIL WITHIN 24 HOURS OF SEEDBED PREPARATION TO A DEPTH OF 1/4 TO 1/2 INCH, BY RAKING OR DRAGGING. DEPTH OF SEED PLACEMENT MAY BE 1/4 INCH DEEPER ON COARSE TEXTURED SOIL.

C. AFTER SEEDING, FIRMING THE SOIL WITH A CORRUGATED ROLLER WILL ASSURE GOOD SEED– TO–SOIL CONTACT, RESTORE CAPILLARY , AND IMPROVE SEEDLING EMERGENCE. THIS IS THE PREFERRED METHOD. WHEN PERFORMED ON THE CONTOUR, SHEET EROSION WILL BE MINIMIZED AND WATER CONSERVATION ON SITE WILL BE MAXIMIZED.

D. HYDROSEEDING IS A BROADCAST SEEDING METHOD USUALLY INVOLVING A TRUCK OR TRAILER MOUNTED TANK, WITH AN AGITATION SYSTEM AND HYDRAULIC PUMP FOR MIXING SEED, WATER AND FERTILIZER AND SPRAYING THE MIX ONTO THE PREPARED SEEDBED. MULCH SHALL NOT BE INCLUDED IN THE TANK WITH SEED. SHORT FIBERED MULCH MAY BE APPLIED WITH A HYDROSEEDER FOLLOWING SEEDING. (ALSO SEE SECTION 4 MULCHING BELOW) HYDROSEEDING IS NOT A PREFERRED SEEDING METHOD BECAUSE SEED AND FERTILIZER ARE APPLIED TO THE SURFACE AND NOT INCORPORATED INTO THE SOIL. WHEN POOR SEED TO SOIL CONTACT OCCURS, THERE IS REDUCED SEED GERMINATION AND GROWTH.

4. MULCHING:

MULCHING IS REQUIRED ON ALL SEEDING. MULCH WILL PROJECT AGAINST EROSION BEFORE GRASS IS ESTABLISHED AND WILL PROMOTE FASTER AND EARLIER ESTABLISHMENT. THE EXISTENCE OF VEGETATION SUFFICIENT TO CONTROL SOIL EROSION SHALL BE DEEMED COMPLIANT WITH THIS MULCHING REQUIREMENT.

A. STRAW OR HAY. UNROTTED SMALL GRAIN STRAW, HAY FREE OF SEEDS, TO BE APPLIED AT THE RATE OF 1–1/2 TO 2 TONS PER ACRE (70 TO 90 POUNDS PER 1,000 SQUARE FEET), EXCEPT THAT WHERE A CRIMPER IS USED INSTEAD OF A LIQUID MULCH–BINDER (TACKIFYING OR ADHESIVE AGENT), THE RATE OF APPLICATION IS 3 TONS PER ACRE. MULCH CHOPPER–BLOWERS MUST NOT GRIND THE MULCH. HAY MULCH IS NOT RECOMMENDED FOR ESTABLISHING FINE TURF OR LAWNS DUE TO THE PRESENCE OF WEED SEED.

APPLICATION. SPREAD MULCH UNIFORMLY BY HAND OR MECHANICALLY SO THAT AT LEAST 85% OF THE SOIL SURFACE WILL BE COVERED. FOR UNIFORM DISTRIBUTION OF HAND–SPREAD MULCH, DIVIDE AREA INTO APPROXIMATELY 1,000 SQUARE FEET SECTIONS AND DISTRIBUTE 70 TO 90 POUNDS WITHIN EACH SECTION. ANCHORING SHALL BE ACCOMPLISHED IMMEDIATELY AFTER PLACEMENT TO MINIMIZE LOSS BY WIND OR WATER. THIS MAY BE DONE BY ONE OF THE FOLLOWING METHODS, DEPENDING UPON THE SIZE OF THE AREA, STEEPNESS OF SLOPE, AND COSTS.

1. PEG AND TWINE. DRIVE 8 TO 10 INCH WOODEN PEGS TO WITHIN 2 TO 3 INCHES OF THE SOIL SURFACE EVERY 4 FEET IN ALL DIRECTIONS. STAKES MAY BE DRIVEN BEFORE OR AFTER APPLYING MULCH. SECURE MULCH TO SOIL SURFACE BY STRETCHING TWINE BETWEEN PEGS IN A CRISSCROSS AND SQUARE PATTERN. SECURE TWINE AROUND EACH PEG WITH TWO OR MORE ROUND TURNS.

2. MULCH NETTINGS. STAPLE PAPER, JUTE, COTTON, OR PLASTIC NETTINGS TO THE SOIL SURFACE. USE A DEGRADABLE NETTING IN AREAS TO BE MOWED.

3. CRIMPER (MULCH ANCHORING COULTER TOOL). A TRACTOR–DRAWN IMPLEMENT, SOMEWHAT LIKE A DISC HARROW, ESPECIALLY DESIGNED TO PUSH OR CUT SOME OF THE BROADCAST LONG FIBER MULCH 3 TO 4 INCHES INTO THE SOIL SO AS TO ANCHOR IT AND LEAVE PART STANDING UPRIGHT. THIS TECHNIQUE IS LIMITED TO AREAS TRAVERSABLE BY A TRACTOR, WHICH MUST OPERATE ON THE CONTOUR OF SLOPES. STRAW MULCH RATE MUST BE 3 TONS PER ACRE. NO TACKIFYING OR ADHESIVE AGENT IS REQUIRED.

4. LIQUID MULCH BINDERS. MAY BE USED TO ANCHOR SALT HAY, HAY OR STRAW MULCH.

A. APPLICATIONS SHOULD BE HEAVIER AT EDGES WHERE WIND MAY CATCH THE MULCH, IN VALLEYS, AND AT CRESTS OF BANKS. THE REMAINDER OF THE AREA SHOULD BE UNIFORM IN APPEARANCE.

B. USE ONE OF THE FOLLOWING:

(1) ORGANIC AND VEGETABLE BASED BINDERS. NATURALLY OCCURRING, POWDER BASED HYDROPHILIC MATERIALS WHEN MIXED WITH WATER FORMULATES A GEL AND WHEN APPLIED TO MULCH UNDER SATISFACTORY CURING CONDITIONS WILL FORM MEMBRANED NETWORKS OF INSOLUBLE POLYMERS. THE VEGETATIVE GEL SHALL BE PHYSIOLOGICALLY HARMLESS AND NOT RESULT IN A PHYTOTOXIC EFFECT OR IMPEDE GROWTH OF TURFGRASS. USE AT RATES AND WEATHER CONDITIONS AS RECOMMENDED BY THE MANUFACTURER TO ANCHOR MULCH MATERIALS. MANY NEW PRODUCTS ARE AVAILABLE, SOME OF WHICH MAY NEED FURTHER EVALUATION FOR USE IN THIS STATE.

(2) SYNTHETIC BINDERS. HIGH POLYMER SYNTHETIC EMULSION, MISCIBLE WITH WATER WHEN DILUTED AND FOLLOWING APPLICATION TO MULCH, DRYING AND CURING SHALL NO LONGER BE SOLUBLE OR DISPERSIBLE IN WATER. BINDER SHALL BE APPLIED AT RATES RECOMMENDED BY THE MANUFACTURER AND REMAIN TACKY UNTIL GERMINATION OF GRASS.

NOTE: ALL NAMES GIVEN ABOVE ARE REGISTERED TRADE NAMES. THIS DOES NOT CONSTITUTE A RECOMMENDATION OF THESE PRODUCTS TO THE EXCLUSION OF OTHER PRODUCTS.

B. WOOD–FIBER OR PAPER –FIBER MULCH SHALL BE MADE FROM WOOD, PLANT FIBERS OR PAPER CONTAINING NO GROWTH OR GERMINATION INHIBITING MATERIALS, USED AT THE RATE OF 1,500 POUNDS PER ACRE (OR AS RECOMMENDED BY THE PRODUCT MANUFACTURER) AND MAY BE APPLIED BY A HYDROSEEDER. MULCH SHALL NOT BE MIXED IN THE TANK WITH SEED. USE IS LIMITED TO FLATTER SLOPES AND DURING OPTIMUM SEEDING PERIODS IN SPRING AND FALL.

C. PELLETIZED MULCH. COMPRESSED AND EXTRUDED PAPER AND/OR WOOD FIBER PRODUCT, WHICH MAY CONTAIN COPOLYMERS, TACKIFIERS, FERTILIZERS AND COLORING AGENTS. THE DRY PELLETS, WHEN APPLIED TO A SEEDED AREA AND WATERED. FORM A MULCH MAT. PELLETIZED MULCH SHALL BE APPLIED IN ACCORDANCE WITH THE MANUFACTURER'S RECOMMENDATIONS. MULCH MAY BE APPLIED BY HAND OR MECHANICAL SPREADER AT THE RATE OF 60–75 LBS/1,000 SQ. FT. AND ACTIVATED WITH 0.2 TO 0.4 INCHES OF WATER. THIS MATERIAL HAS BEEN FOUND TO BE BENEFICIAL FOR USE ON SMALL LAWN RENOVATION AREAS, SEEDED AREAS WHERE WEED–SEED FREE MULCH IS DESIRED OR ON SITES WHERE STRAW MULCH AND TACKIFIER AGENT ARE NOT PRACTICAL OR DESIRABLE. APPLYING THE FULL 0.2 TO 0.4 INCHES OF WATER AFTER SPREADING PELLETIZED MULCH ON THE SEEDBED IS EXTREMELY IMPORTANT FOR SUFFICIENT ACTIVATION AND EXPANSION OF THE MULCH TO PROVIDE SOIL COVERAGE.

5. IRRIGATION (WHERE FEASIBLE):

IF SOIL MOISTURE IS DEFICIENT SUPPLY NEW SEEDING WITH ADEQUATE WATER (A MINIMUM OF 1/4 INCH APPLIED UP TO TWICE A DAY UNTIL VEGETATION IS WELL ESTABLISHED). THIS IS ESPECIALLY TRUE WHEN SEEDINGS ARE MADE IN ABNORMALLY DRY OR HOT WEATHER OR ON DROUGHTY SITES.

6. TOP DRESSING:

SINCE SOIL ORGANIC MATTER CONTENT AND SLOW RELEASE NITROGEN FERTILIZER (WATER INSOLUBLE) ARE PRESCRIBED IN SECTION 2A – SEEDBED PREPARATION IN THIS STANDARD, NO FOLLOW–UP OF TOPDRESSING IS MANDATORY. AN EXCEPTION MAY BE MADE WHERE GROSS NITROGEN DEFICIENCY EXISTS IN THE SOIL TO THE EXTENT THAT TURF FAILURE MAY DEVELOP. IN THAT INSTANCE, TOPDRESS WITH 10–10–10 OR EQUIVALENT AT 300 POUNDS PER ACRE OR 7 POUNDS PER 1,000 SQUARE FEET EVERY 3 TO 5 WEEKS UNTIL THE GROSS NITROGEN DEFICIENCY IN THE TURF IS AMELIORATED.

7. ESTABLISHING PERMANENT VEGETATIVE STABILIZATION:

THE QUALITY OF PERMANENT VEGETATION RESTS WITH THE CONTRACTOR. THE TIMING OF SEEDING, PREPARING THE SEEDBED, APPLYING NUTRIENTS, MULCH AND OTHER MANAGEMENT ARE ESSENTIAL. THE SEED APPLICATION RATES IN THE PERMANENT SEEDING TABLE ARE REQUIRED WHEN A REPORT OF COMPLIANCE IS REQUESTED PRIOR TO ACTUAL ESTABLISHMENT OF PERMANENT VEGETATION. UP TO 50%%% REDUCTION IN APPLICATION RATES MAY BE USED WHEN PERMANENT VEGETATION IS ESTABLISHED PRIOR TO REQUESTING A REPORT OF COMPLIANCE FROM THE DISTRICT. THESE RATES APPLY TO ALL METHODS OF SEEDING. ESTABLISHING PERMANENT VEGETATION MEANS 80%%% VEGETATIVE COVER (OF THE SEEDED SPECIES) AND MOWED ONCE. NOTE THIS DESIGNATION OF MOWED ONCE DOES NOT GUARANTEE THE PERMANENCY OF THE TURF SHOULD OTHER MAINTENANCE FACTORS BE NEGLECTED OR OTHERWISE MISMANAGED.

Engineers
Landscape Architects
Land Surveyors
Planners
575 Route 28, Suite 110
Raritan, N.J. 08869
908–722–1500
Fax 908–722–7035
www.reynoldsgrp.com

The Reynolds Group Inc.

State of New Jersey
Certificate of Authorization
Number 24GA27969200
21MH00004300

F. Mitchel Ardman, P.E., P.P.
Jeffrey D. Reynolds, P.L.A.

F Mitchel Ardman
F. MITCHEL ARDMAN
N.J. PROFESSIONAL ENGINEER LIC. NO. 34317

project

ACCESS SELF STORAGE

BLOCK 502.01, LOTS 45.01 & 46.01
297 & 305 DAVIDSON AVENUE
TOWNSHIP OF FRANKLIN
SOMERSET COUNTY, NEW JERSEY

drawing title

SOIL EROSION & SEDIMENT CONTROL DETAILS

job number 21–010	drawing number 9
scale AS SHOWN	
checked by FMA	
drawn by GH	
date 08/31/2021	sheet 9 of 15

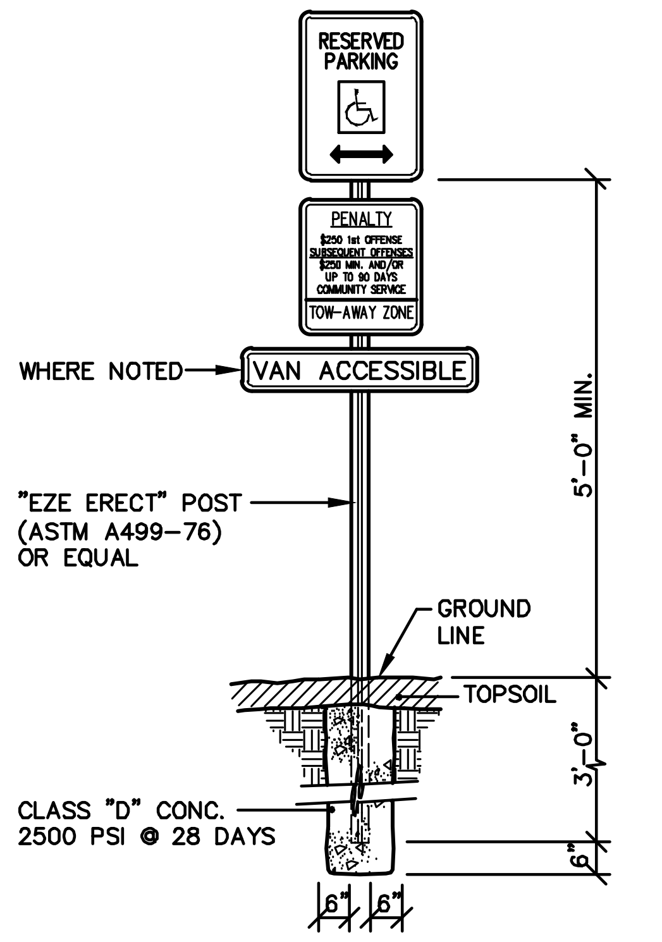
RESERVED PARKING
PENALTY
$250 1st OFFENSE
SUBSEQUENT OFFENSES
$250 MIN. AND/OR UP TO 90 DAYS COMMUNITY SERVICE
TOW-AWAY ZONE
WHERE NOTED
VAN ACCESSIBLE
"EZE ERECT" POST (ASTM A499-76) OR EQUAL
GROUND LINE
TOPSOIL
CLASS "D" CONC. 2500 PSI @ 28 DAYS
5'-0" MIN.
3'-0"
6"
6"
6"

HANDICAPPED SIGNS

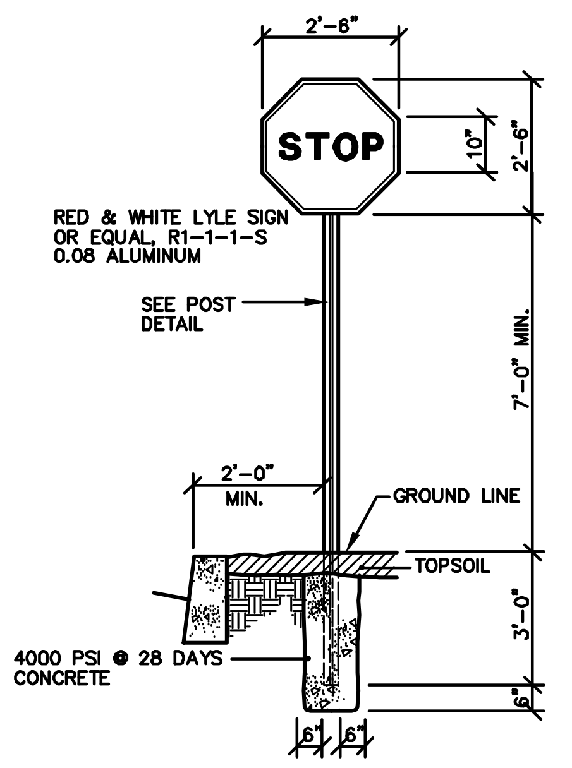
2'-6"
STOP
10"
2'-6"
RED & WHITE LYLE SIGN OR EQUAL, R1-1-1-S 0.08 ALUMINUM
SEE POST DETAIL
7'-0" MIN.
2'-0" MIN.
GROUND LINE
TOPSOIL
4000 PSI @ 28 DAYS CONCRETE
3'-0"
6"
6"
6"

STOP SIGN

N.T.S.

R6-1L
36"x12"

ONE WAY SIGN

N.T.S.

R5-1
30"x30"

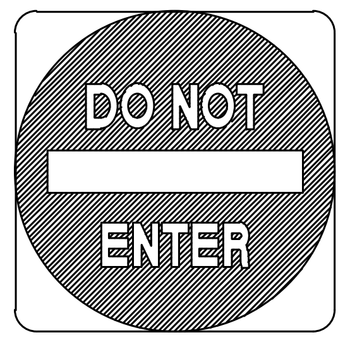
DO NOT
ENTER

DO NOT ENTER SIGN

N.T.S.

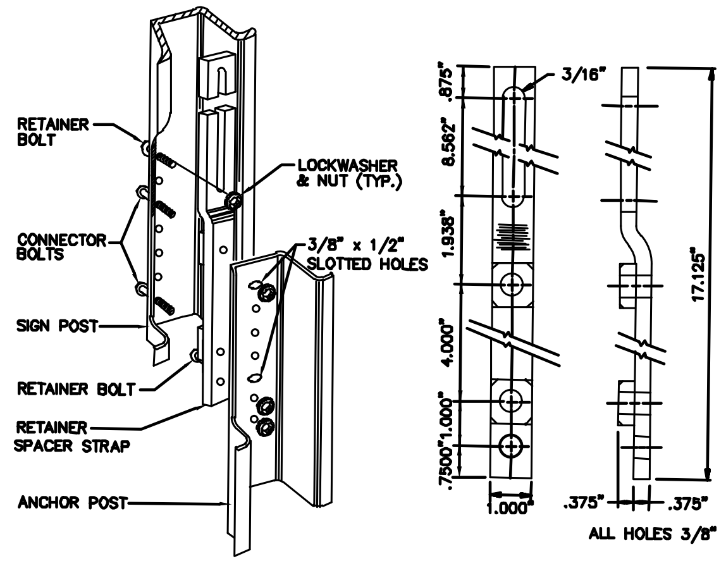
RETAINER BOLT
LOCKWASHER & NUT (TYP.)
CONNECTOR BOLTS
3/8" x 1/2" SLOTTED HOLES
SIGN POST
RETAINER BOLT
RETAINER SPACER STRAP
ANCHOR POST
TWO PIECE STEEL U-POSTS
.875"
8.562"
1.938"
4.000"
1.000"
.7500"
1.000"
3/16"
17.125"
.375"
.375"
ALL HOLES 3/8" DIA.
STRAP

GENERAL NOTES:

1. DRIVE THE ANCHOR POST INTO THE GROUND (UTILIZING A DRIVE CAP) UNTIL 10-12" OF ANCHOR POST IS REMAINING ABOVE GROUND LEVEL.
2. ALIGN THE CONNECTION HOLE CLOSEST TO THE LONG SLOT IN THE RETAINER SPACER STRAP WITH THE TOP HOLE IN THE ANCHOR POST. THE STRAP IS THEN ATTACHED BY MAKING A BOLTED CONNECTION THROUGH THE BOTTOM HOLE IN THE STRAP AND THE HOLE IT ALIGNS WITH IN THE ANCHOR POST.
3. ROTATE THE STRAP 90 DEGREES TO THE LEFT AND DRIVE THE ANCHOR POST INTO THE GROUND UNTIL ONLY 4" REMAINS ABOVE GROUND LEVEL. THIS 4" MUST BE ADHERED TO FOR SAFETY REASONS TO ENHANCE THE BREAKAWAY FEATURES OF THE SIGN IN ACCORDANCE WITH CURRENT FEDERAL AND STATE SAFETY STANDARDS. EXCAVATE AS REQUIRED TO TIGHTEN BOLTS.
4. ROTATE THE STRAP BACK TO VERTICAL POSITION.
5. PLACE THE SIGN POST AGAINST THE ANCHOR POST AND THE STRAP. ALIGN THE BOTTOM HOLE IN THE SIGN POST WITH THE CONNECTION HOLE IN THE LOWER END OF THE STRAP. INSERT TWO (2) CONNECTOR BOLTS THROUGH THE COMMON HOLES IN THE SIGN POST, STRAP AND ANCHOR POST.
6. COMPLETE THE CONSTRUCTION BY ATTACHING THE STRAP TO THE SIGN POST WITH A BOLT AND NUT. THIS CONNECTION SHALL BE MADE AT THE BOTTOM OF THE LONG SLOT IN THE STRAP.
7. TWO PIECE STEEL U-POST IS A PATENTED DEVICE. THE PATENT NO. IS 4126403.

TWO PIECE STEEL U-POST

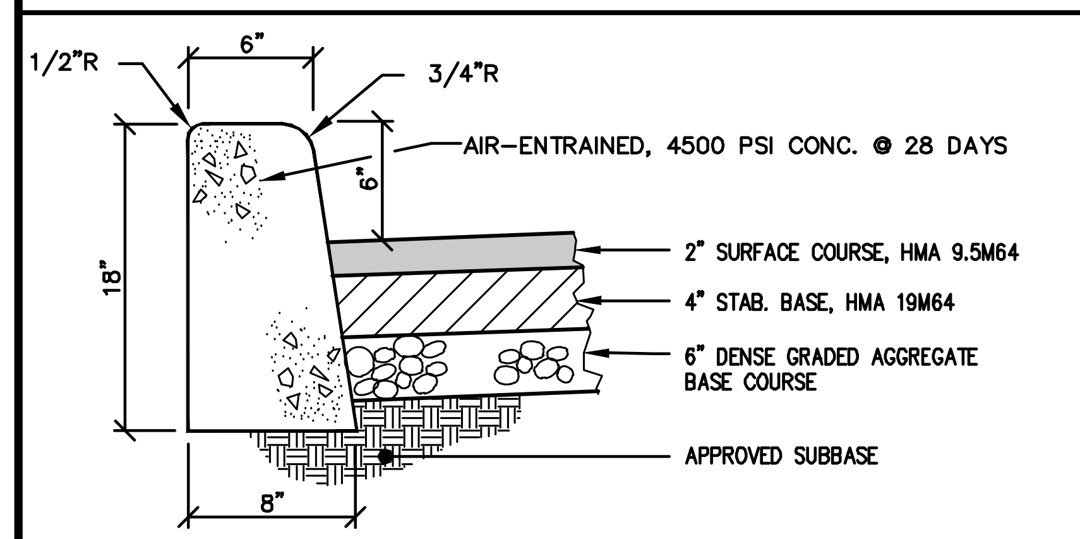
1/2"R
6"
3/4"R
AIR-ENTRAINED, 4500 PSI CONC. @ 28 DAYS
6"
18"
2" SURFACE COURSE, HMA 9.5M64
4" STAB. BASE, HMA 19M64
6" DENSE GRADED AGGREGATE BASE COURSE
APPROVED SUBBASE
8"

NOTE:

1. 1/2" EXPANSION JOINTS @20.0' MAX., WITH 1/4"R @ JOINT EDGES.
2. EXPANSION JOINT MATERIAL IS TO BE PREMOLDED ASPHALT-IMPREGNATED CELLULAR-TYPE JOINT FILLER, 1/2" THK. MIN., AASHTO-M213 INSET 1/4" FROM FRONT & TOP SURFACES.
3. PROVIDE EXPANSION JOINTS BETWEEN CURB & ADJACENT CONC. PAVING, WALKS OR DRIVEWAY APRONS.
4. DEPRESSED VERTICAL CURB AT DRIVEWAY AND RAMP AREAS SHALL BE FULL DEPTH OF 18"
5. TACK COAT MATERIAL TO BE INSTALLED BETWEEN ASPHALT LAYERS.

ON-SITE CONC. CURB AND PAVEMENT

NOTE:
HYDRANTS-
BLACK CAPS OR RINGS
BEHIND CAPS = OUT OF SERVICE

FIRE HYDRANT
COLOR CODING
RED BARRELS AND
WHITE OR SILVER TOPS
RED CAPS 6" MAIN
YELLOW CAPS 8" MAIN
GREEN CAPS 10" MAIN
BLUE CAPS 12" MAIN

NOTE:

AS PER ORDINANCE 1284
24 HRS. NOTICE SHALL BE GIVEN TO THE FRANKLIN TOWNSHIP WATER DIVISION PRIOR TO ANY EXTENSION OR INSTALLATION OF ANY WATER APPARATUS.
NO PERSON EXCEPT A TOWNSHIP EMPLOYEE SHALL OPEN OR CLOSE ANY VALVES.
FAILURE TO NOTIFY THE WATER DIVISION COULD RESULT IN A FINE UP TO $1,000.00.

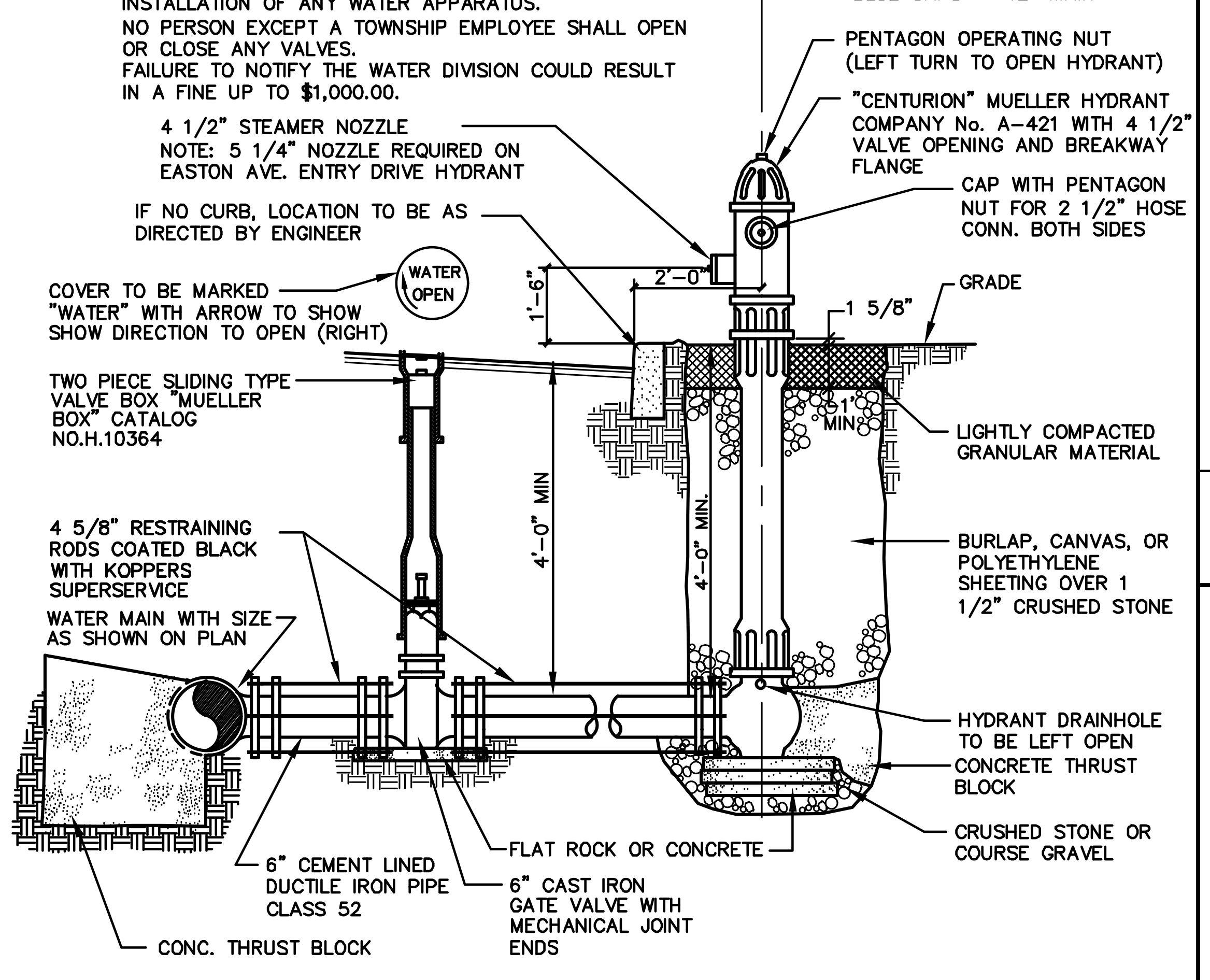
4 1/2" STEAMER NOZZLE
NOTE: 5 1/4" NOZZLE REQUIRED ON EASTON AVE. ENTRY DRIVE HYDRANT
IF NO CURB, LOCATION TO BE AS DIRECTED BY ENGINEER
COVER TO BE MARKED "WATER" WITH ARROW TO SHOW SHOW DIRECTION TO OPEN (RIGHT)
WATER OPEN
TWO PIECE SLIDING TYPE VALVE BOX "MUELLER BOX" CATALOG NO.H.10364
4 5/8" RESTRAINING RODS COATED BLACK WITH KOPPERS SUPERSERVICE
WATER MAIN WITH SIZE AS SHOWN ON PLAN
6" CEMENT LINED DUCTILE IRON PIPE CLASS 52
CONC. THRUST BLOCK
FLAT ROCK OR CONCRETE
6" CAST IRON GATE VALVE WITH MECHANICAL JOINT ENDS
PENTAGON OPERATING NUT (LEFT TURN TO OPEN HYDRANT)
"CENTURION" MUELLER HYDRANT COMPANY No. A-421 WITH 4 1/2" VALVE OPENING AND BREAKWAY FLANGE
CAP WITH PENTAGON NUT FOR 2 1/2" HOSE CONN. BOTH SIDES
GRADE
1 5/8"
1'-6"
2'-0"
1' MIN.
4'-0" MIN
4'-0" MIN.
LIGHTLY COMPACTED GRANULAR MATERIAL
BURLAP, CANVAS, OR POLYETHYLENE SHEETING OVER 1 1/2" CRUSHED STONE
HYDRANT DRAINHOLE TO BE LEFT OPEN
CONCRETE THRUST BLOCK
CRUSHED STONE OR COURSE GRAVEL

FIRE HYDRANT MARKERS

EACH FIRE HYDRANT SHALL BE MARKED WITH A STANDARD U-CHANNEL POST 1 1/2" WIDE. THE POST SHALL BE SIX (6) FEET TALL AND BE DRIVEN INTO THE GROUND 18-24 INCHES. THE POST SHALL HAVE TWO (2) BLUE COLORED REFLECTORS, THREE (3) INCHES IN DIAMETER. ONE REFLECTOR ON EACH SIDE OF THE POST, FACING TRAFFIC. THE POST SHALL BE INSTALLED 24-30 INCHES BEFORE THE FIRE HYDRRANT, AND SLIGHTLY BEHIND THE HYDRANT.

FIRE HYDRANTS MUST BE FLOW TESTED BY THE FIRE PREVENTION DEPARTMENT. WRITTEN REQUEST AND APPROPRIATE FEES MUST BE SUBMITTED

FIRE HYDRANTS MUST COMPLY WITH THE DETAIL, ALL THREADS MUST BE LUBRICATED, AND ALL VALVES MUST BE FULLY OPEN PRIOR TO TESTING.

TYPICAL HYDRANT AND VALVE INSTALLATION

NOTES:

1. *WATER METER WILL BE FURNISHED BY FRANKLIN TOWNSHIP WATER DIVISION. COMPOSITE RIM, 23"x13" COVER AND METER BRASS METER YOKE TO BE ACQUIRED BY CONTRACTOR.*
2. *ALL PLUMBING MUST COMFORM WITH LOCAL PLUMBING ORDINANCES.*
3. *CONTRACTOR SHALL SUBMIT SHOP DRAWINGS TO THE FRANKLIN TOWNSHIP FOR APPROVAL, INCLUDING METER PIT, PIPES, FITTINGS, VALVES AND APPURTENANCES.*
4. *METER PIT AND LID SHALL BE INSTALLED PER MANUFACTURER'S SPECIFICATIONS.*

METER SIZE	LAYING LENGTH*
1.5"	13"
2"	17"

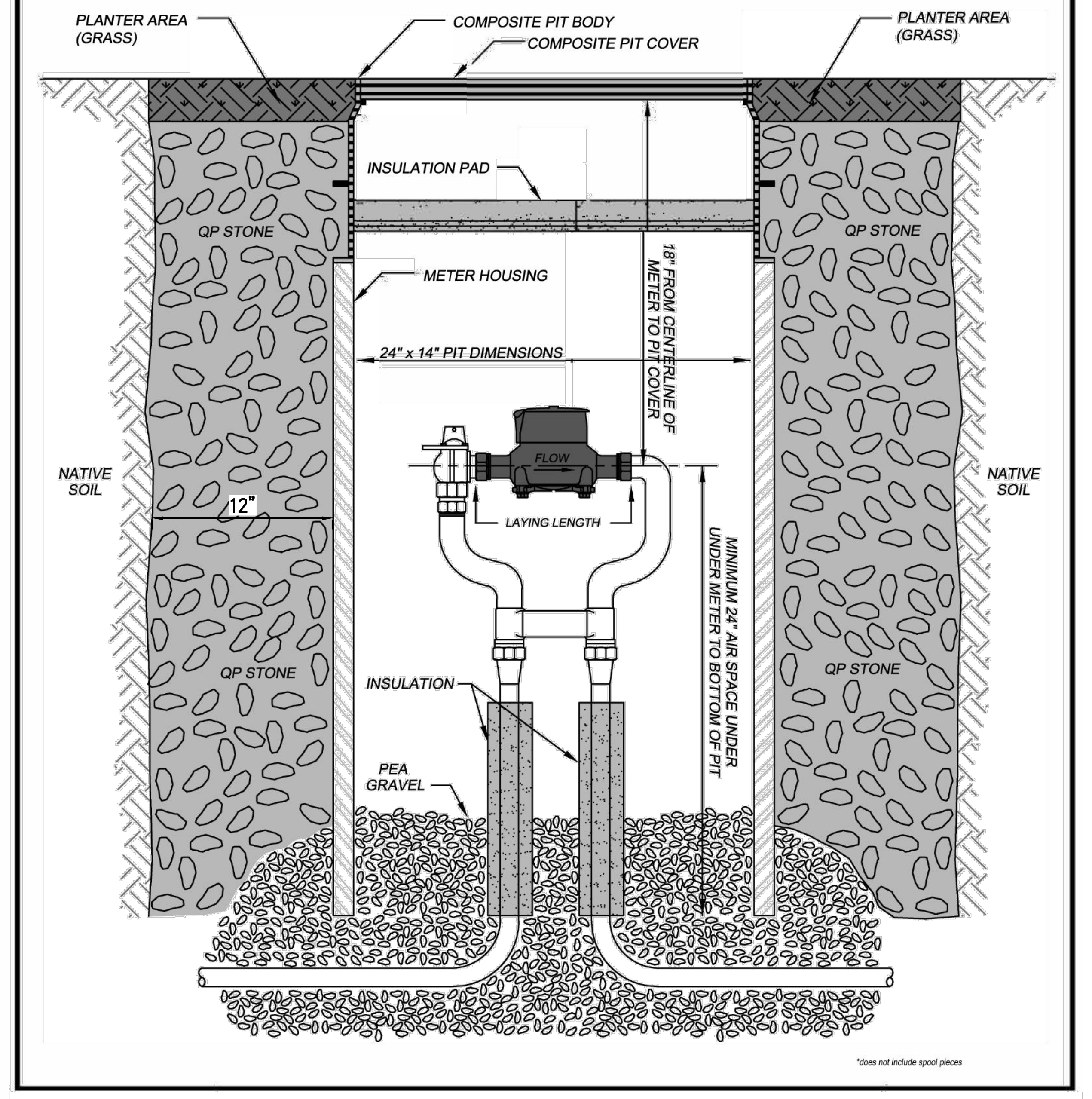
PLANTER AREA (GRASS)
COMPOSITE PIT BODY
COMPOSITE PIT COVER
PLANTER AREA (GRASS)
INSULATION PAD
QP STONE
QP STONE
METER HOUSING
18" FROM CENTERLINE OF METER TO PIT COVER
24" x 14" PIT DIMENSIONS
NATIVE SOIL
NATIVE SOIL
12"
FLOW
LAYING LENGTH
MINIMUM 24" AIR SPACE UNDER METER TO BOTTOM OF PIT
QP STONE
QP STONE
INSULATION
PEA GRAVEL

**does not include spool pieces*

WATER METER PIT DETAIL

N.T.S.

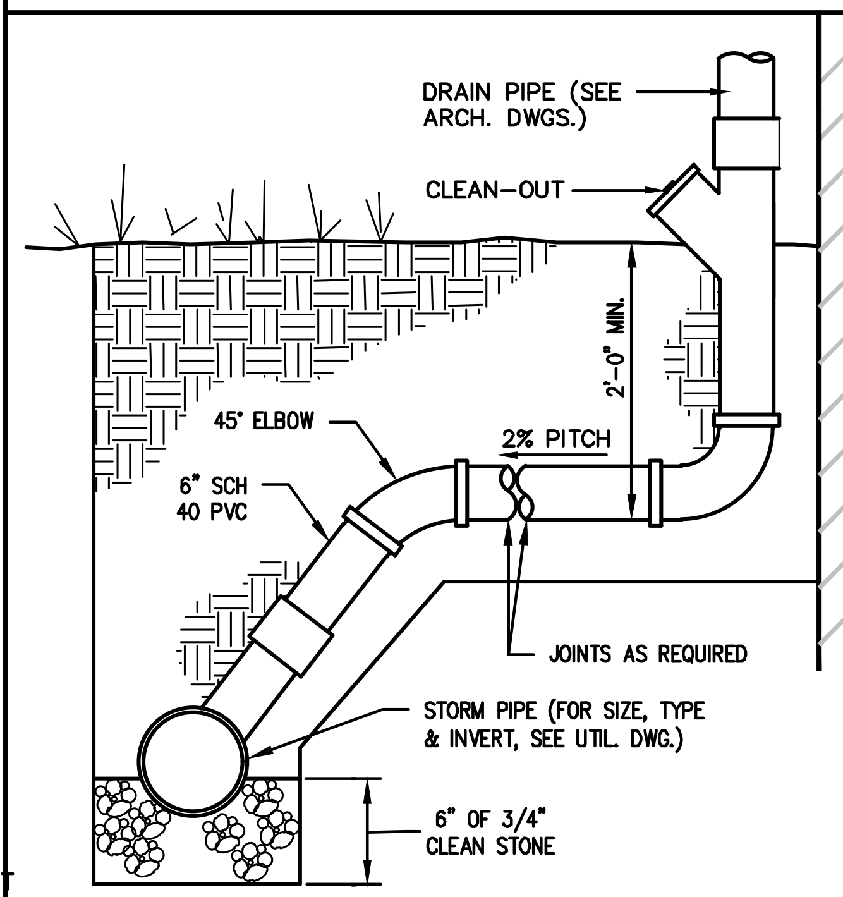
DRAIN PIPE (SEE ARCH. DWGS.)
CLEAN-OUT
2'-0" MIN.
45° ELBOW
2% PITCH
6" SCH 40 PVC
JOINTS AS REQUIRED
STORM PIPE (FOR SIZE, TYPE & INVERT, SEE UTIL. DWG.)
6" OF 3/4" CLEAN STONE

NOTE:

1. ALL COUPLINGS, PLUGS AND CAPS SHALL BE STANDARD FOR TYPE OF PIPE USED AND INSTALLATION TO BE WATERTIGHT. SCHEDULE 40 PVC PIPE REQUIRED.
2. CLEANOUTS OR INSPECTION WYES ARE TO BE LOCATED AS SHOWN ON DETAIL.
3. FOR PIPE BEDDING DETAILS, SEE DETAILS THIS SHEET.

DRAIN PIPE CONNECTION

NOTE:
ALL MECHANICAL JOINTS AND FITTINGS SUCH AS BENDS MUST BE RODDED AND THRUST BLOCKED.

THRUST BLOCKS FOR TEES, HORIZONTAL AND VERTICAL BENDS & PLUGS

	DESCRIPTIONS	DIMENSION	4"ø	6"ø	8"ø	10"ø	12"ø	14"ø	16"ø	20"ø	24"ø
	TEES	N	0'-7"	0'-10"	1'-2"	1'-5"	1'-8"	1'-11"	2'-4"	2'-8"	3'-2"
		O	0'-7"	0'-10"	1'-2"	1'-5"	1'-8"	1'-11"	2'-4"	2'-8"	3'-2"
HORIZ. AND VERT. UPWARD	90° BENDS	P	0'-9"	1'-0"	1'-4"	1'-8"	1'-11"	2'-3"	2'-7"	3'-2"	3'-9"
		Q	0'-9"	1'-0"	1'-4"	1'-8"	1'-11"	2'-3"	2'-7"	3'-2"	3'-9"
	45° BENDS	P	0'-7"	0'-9"	1'-0"	1'-3"	1'-5"	1'-8"	1'-11"	2'-4"	2'-9"
		Q	0'-7"	0'-9"	1'-0"	1'-3"	1'-5"	1'-8"	1'-11"	2'-4"	2'-9"
	22.5° BENDS	P	0'-5"	0'-7"	0'-9"	0'-11"	1'-0"	1'-2"	1'-4"	1'-8"	2'-0"
		Q	0'-5"	0'-7"	0'-9"	0'-11"	1'-0"	1'-2"	1'-4"	1'-8"	2'-0"
	11.25° BENDS	P	0'-4"	0'-5"	0'-6"	0'-8"	0'-9"	0'-10"	1'-0"	1'-2"	1'-5"
		Q	0'-4"	0'-5"	0'-5"	0'-8"	0'-9"	0'-10"	1'-0"	1'-2"	1'-5"
VERT. DOWNWARD	45° BENDS	MIN. CONC. ANCHORAGE *	0.6 C.Y.	1.1 C.Y.	1.9 C.Y.	2.8 C.Y.	3.9 C.Y.	5.2 C.Y.	6.8 C.Y.	10.4 C.Y.	14.9 C.Y.
	22.5° BENDS	MIN. CONC. ANCHORAGE *	0.3 C.Y.	0.6 C.Y.	1.0 C.Y.	1.4 C.Y.	2.0 C.Y.	2.7 C.Y.	3.5 C.Y.	5.3 C.Y.	7.6 C.Y.
	11.25° BENDS	MIN. CONC. ANCHORAGE *	0.2 C.Y.	0.3 C.Y.	0.5 C.Y.	0.7 C.Y.	1.0 C.Y.	1.4 C.Y.	1.8 C.Y.	2.7 C.Y.	3.8 C.Y.
	PLUGS	R	1'-2"	1'-8"	2'-4"	2'-10"	3'-4"	3'-10"	4'-8"	5'-4"	6'-4"
		S	1'-2"	1'-8"	2'-4"	2'-10"	3'-4"	3'-10"	4'-8"	5'-4"	6'-4"

THRUST BLOCKS DESIGNED FOR 150 P.S.I. TEST PRESSURE & 2,000 P.S.F. SOIL PRESSURE.
*MIN. CONC. ANCHORAGE WITHOUT BACKFILL AND NO GROUND WATER CONDITION.

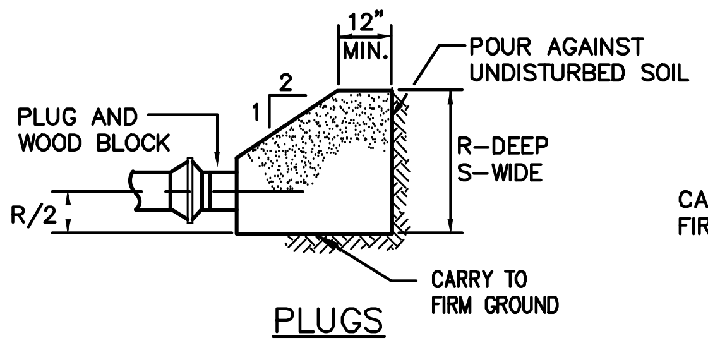
12" MIN.
POUR AGAINST UNDISTURBED SOIL
2
1
PLUG AND WOOD BLOCK
R-DEEP
S-WIDE
R/2
CARRY TO FIRM GROUND

PLUGS

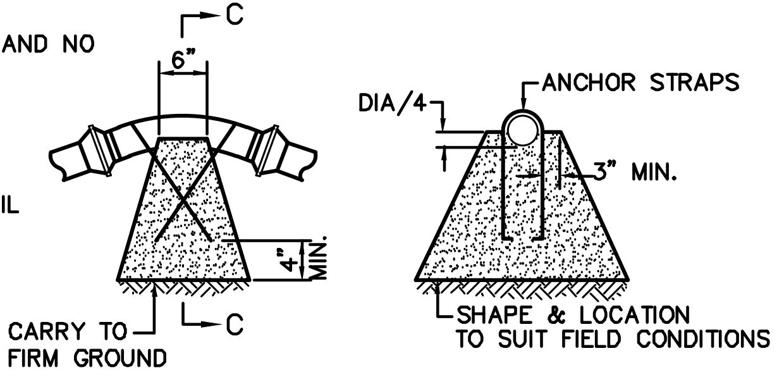
C
6"
DIA/4
ANCHOR STRAPS
3" MIN.
4" MIN.
CARRY TO FIRM GROUND
C
SHAPE & LOCATION TO SUIT FIELD CONDITIONS

ELEVATION   SECTION 'C'-'C'

VERTICAL DOWNWARD BENDS

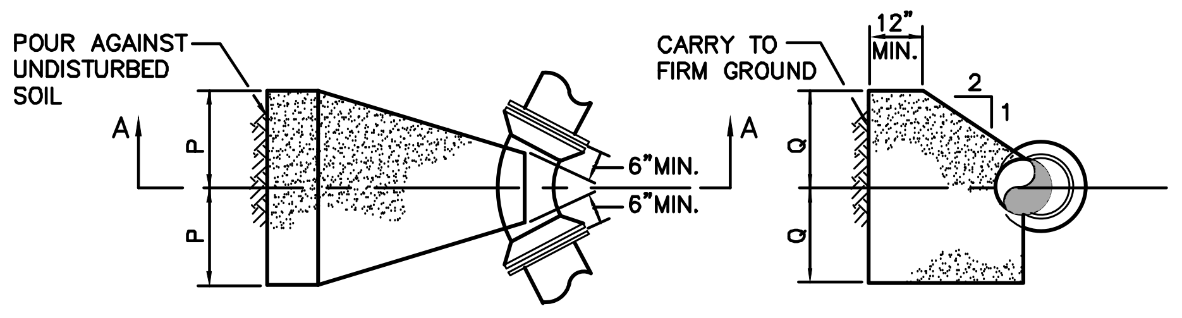
POUR AGAINST UNDISTURBED SOIL
A
P
P
6"MIN.
6"MIN.
A
CARRY TO FIRM GROUND
12" MIN.
2
1
Q
Q

PLAN   SECTION 'A'-'A'

HORIZONTAL AND VERTICAL UPWARD BENDS

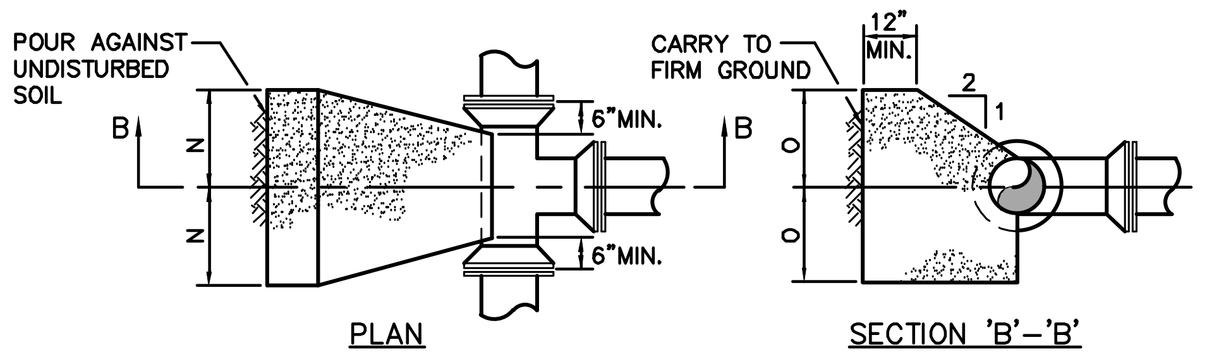
POUR AGAINST UNDISTURBED SOIL
B
N
N
6"MIN.
6"MIN.
B
CARRY TO FIRM GROUND
12" MIN.
2
1
O
O

PLAN   SECTION 'B'-'B'

THRUST BLOCKS

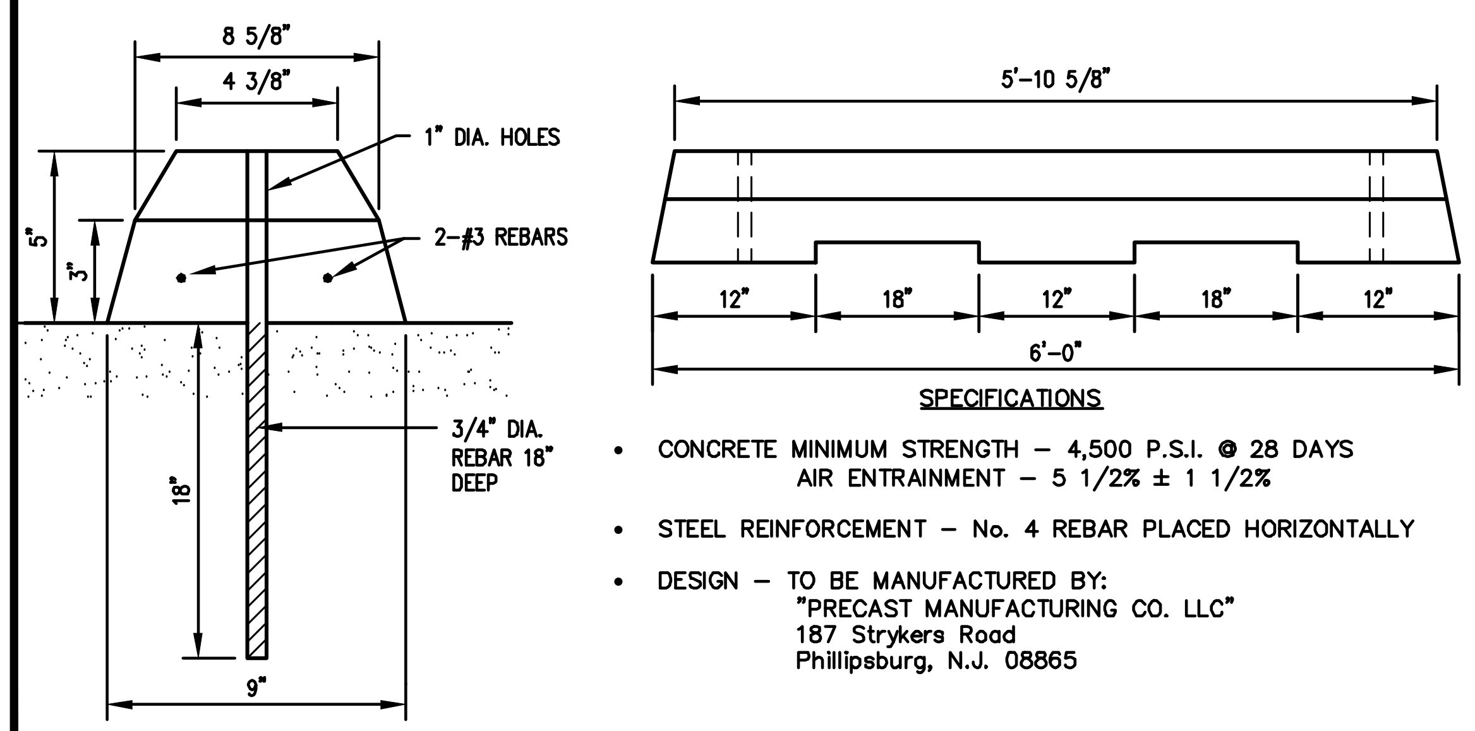
8 5/8"
4 3/8"
1" DIA. HOLES
2-#3 REBARS
5"
3"
3/4" DIA. REBAR 18" DEEP
18"
9"
5'-10 5/8"
12"
18"
12"
18"
12"
6'-0"

SPECIFICATIONS

- CONCRETE MINIMUM STRENGTH – 4,500 P.S.I. @ 28 DAYS
  AIR ENTRAINMENT – 5 1/2% ± 1 1/2%
- STEEL REINFORCEMENT – No. 4 REBAR PLACED HORIZONTALLY
- DESIGN – TO BE MANUFACTURED BY:
  "PRECAST MANUFACTURING CO. LLC"
  187 Strykers Road
  Phillipsburg, N.J. 08865

6' CONCRETE BUMPER STOP

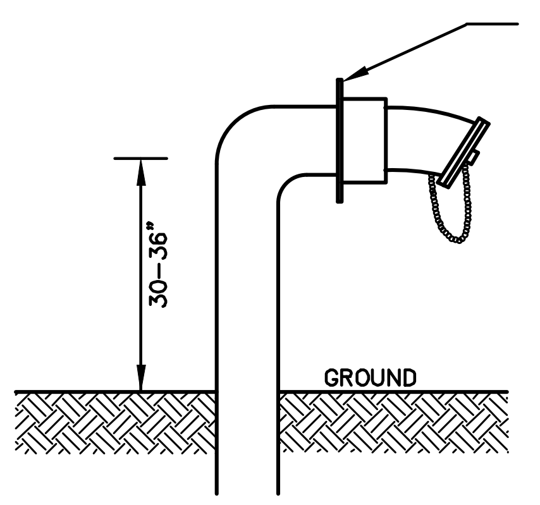
30-36"
GROUND
FREESTANDING

A METAL SIGN WITH RAISED LETTERS AT LEAST 1 INCH (25MM) IN HEIGHT SHALL BE MOUNTED ON ALL FIRE DEPARTMENT CONNECTIONS SERVING SPRINKLERS OR STANDPIPES, SUCH SIGNS SHALL READ "AUTOMATIC SPRINKLERS" OR "STANDPIPE", OR BOTH, AS APPLICABLE.

PIPE MUST BE PAINTED RED. STEEL BOLLARDS MAY BE REQUIRED (YELLOW).

5" STORZ HOSE CONNECTION
FIRE DEPARTMENT CONNECTIONS SHALL BE LOCATED IN A VISIBLE, EASILY ACCESSIBLE LOCATION APPROVED BY THE TOWNSHIP FIRE OFFICAIL. THIS LOCATION MUST BE WITHIN 50 FEET OF A FIRE HYDRANT AND LOCATED ON THAT SAME SIDE OF THE STREET.

SIGNS
FIRE DEPARTMENT CONNECTIONS SHALL HAVE A SIGN INSTALLED ABOVE THEM. THIS SIGN SHALL BE VISIBLE FROM THE DRIVEWAY OR ROADWAY WHERE THE FIRE DEPARTMENT WOULD ACCESS THE FDC.

THE SIGN SHALL BE RECTANGULAR SHAPED WITH RED LETTERS AND RED BORRDER ON A WHITE BACKGROUND AND SHALL BE A MINIMUM OF TWELVE (12) INCHES BY EIGHTEEN (18) INCHES WITH THE LONGER DIMENSION HORIZONTAL. SIGNS SHALL BE MADE OF METAL OR OTHER COMPARABLE DURABLE MATERIAL AND ALL CORNERS SHALL BE ROUNDED. SIGNS SHALL BE REFLECTORIZED. THE MESSAGE ON THE SIGNS SHALL READ "FDC" AND THE LETTERS SHALL BE EIGHT (8) INCHES HIGH AND ONE AND ONE (1 1/4) INCH WIDE.

FIRE DEPARTMENT CONNECTIONS

N.T.S.

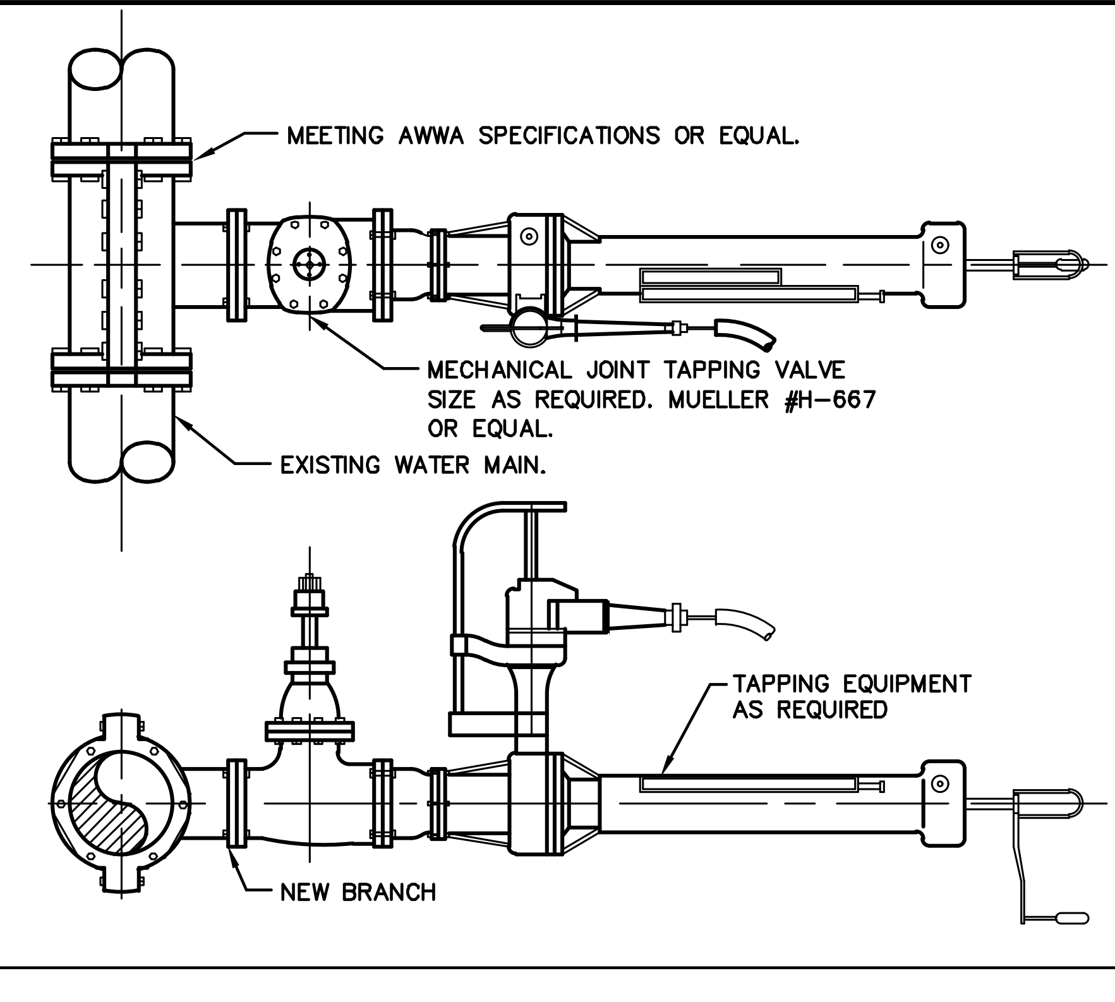
MEETING AWWA SPECIFICATIONS OR EQUAL.
MECHANICAL JOINT TAPPING VALVE SIZE AS REQUIRED. MUELLER #H-667 OR EQUAL.
EXISTING WATER MAIN.
TAPPING EQUIPMENT AS REQUIRED
NEW BRANCH

WET TAP

revisions

no.	date	description
1	10/12/21	PER SCD & TWP COMMENTS/NJDEP PERMIT PLAN
2	01/17/22	PER DEP, DRCC & COUNTY COMMENTS

LEGEND

- GAS VALVE
- GAS METER
- WATER VALVE
- HYDRANT
- WATER METER
- CS CURB STOP
- FDC FIRE DEPT. CONNECTION
- DRAINAGE MH
- CURB INLET
- LAWN INLET
- SANITARY MH
- C.O. CLEANOUT
- BOLLARD
- SIGN
- LIGHT
- MAIL BOX
- GUY WIRE
- UTILITY POLE
- ELECTRIC MH
- CONIFEROUS TREE
- DECIDUOUS TREE
- — X — FENCE
- RAILING
- WALL
- GATE POST
- — W — WATER LINE
- — G — GAS LINE
- — E — ELECTRIC LINE
- — S — SANITARY LINE
- —OH— OVERHEAD WIRES

Engineers
Landscape Architects
Land Surveyors
Planners
575 Route 28, Suite 110
Raritan, N.J. 08869
908-722-1500
Fax 908-722-7035
www.reynoldsgrp.com

The Reynolds Group Inc.

State of New Jersey
Certificate of Authorization
Number 24GA27969200
21MH00004300

F. Mitchel Ardman, P.E., P.P.
Jeffrey D. Reynolds, P.L.A.

F Mitchel Ardman
F. MITCHEL ARDMAN
N.J. PROFESSIONAL ENGINEER LIC. NO. 34317

project

ACCESS SELF STORAGE

BLOCK 502.01, LOTS 45.01 & 46.01
297 & 305 DAVIDSON AVENUE
TOWNSHIP OF FRANKLIN
SOMERSET COUNTY, NEW JERSEY

drawing title

CONSTRUCTION DETAILS

job number 21-010	drawing number 10
scale AS SHOWN	
checked by FMA	
drawn by GH	
date 08/31/2021	sheet 10 of 15

J:\ENGINEERING PROJECTS\2021\21-010 - 297 DAVIDSON AVE_CAD\DESIGN\21-010 DETAILS (R2).DWG-(1/26/22)

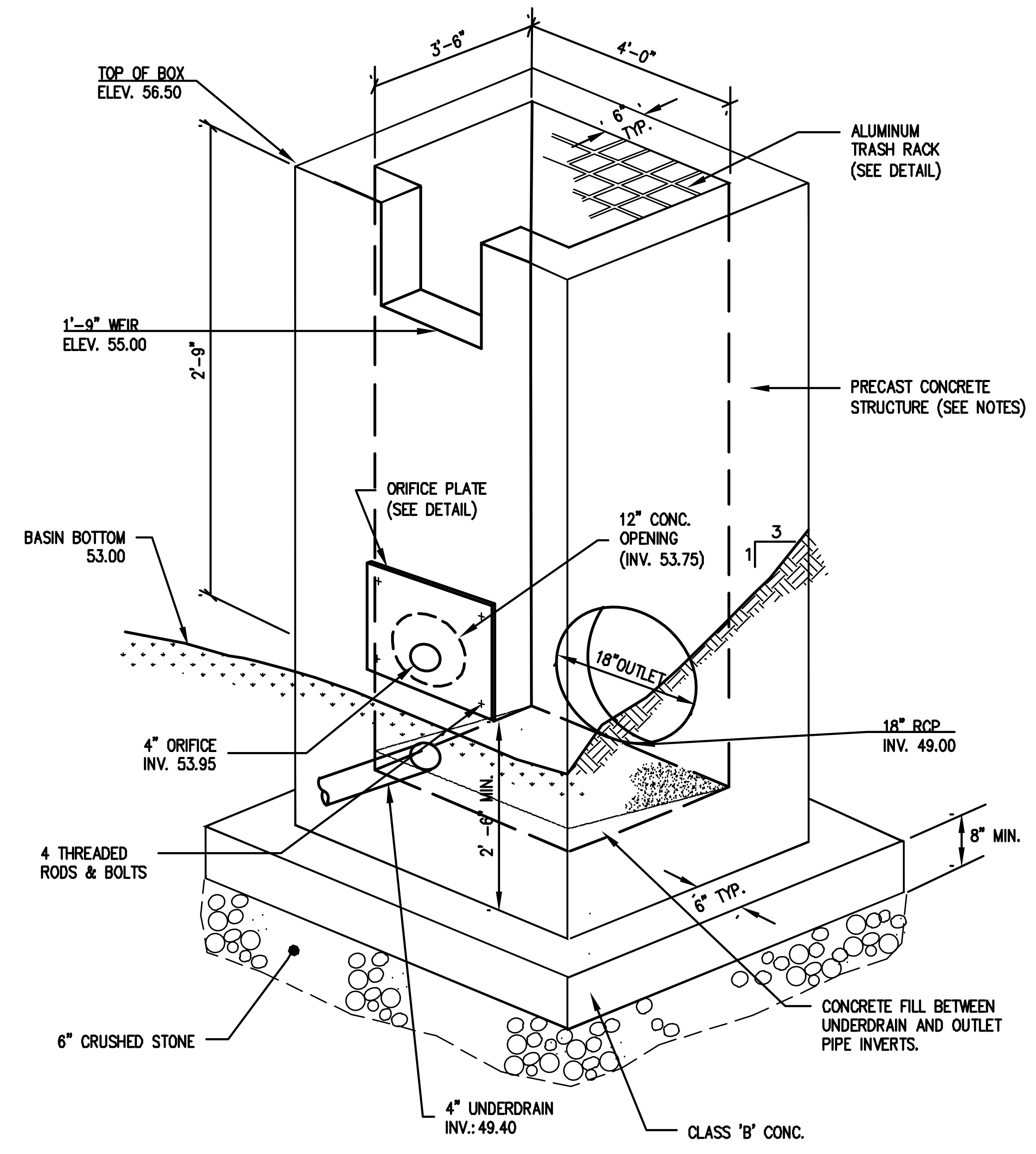
3'-6"
4'-0"
TOP OF BOX
ELEV. 56.50
6" TYP.
ALUMINUM TRASH RACK (SEE DETAIL)
1'-9" WEIR
ELEV. 55.00
2'-9"
PRECAST CONCRETE STRUCTURE (SEE NOTES)
ORIFICE PLATE (SEE DETAIL)
12" CONC. OPENING (INV. 53.75)
BASIN BOTTOM
53.00
3
1
18"OUTLET
18" RCP
INV. 49.00
4" ORIFICE
INV. 53.95
4 THREADED RODS & BOLTS
2'-6" MIN.
8" MIN.
6" TYP.
CONCRETE FILL BETWEEN UNDERDRAIN AND OUTLET PIPE INVERTS.
6" CRUSHED STONE
4" UNDERDRAIN
INV.: 49.40
CLASS 'B' CONC.

NOTES:
1. TRASH RACKS SHALL BE MOUNTED ON EXTERIOR FRONT WALL OF O.S. TO PROTECT ORIFICE/WEIR (SEE DETAIL).
2. POLYPROPYLENE LADDER RUNGS SHALL BE INSTALLED ON ONE SIDE WALL @ 12" O.C.
3. THE STRUCTURE SHALL BE DESIGNED FOR HS-20 LOADING AND SHALL MEET NJDOT STANDARD SPECIFICATIONS.
4. SHOP DRAWINGS FOR PRECAST STRUCTURES, PREPARED BY THE PRECAST MANUFACTURER, SHALL BE PROVIDED FOR REVIEW AND APPROVAL.

OUTLET STRUCTURE

N.T.S.

NOTE: CONTRACTOR SHALL USE RUBBER TIRED OR LIGHT DUTY EQUIPMENT WITHIN THE LIMITS OF THE BIORETENTION BASIN TO MINIMIZE COMPACTION OF UNDERLYING SOIL.

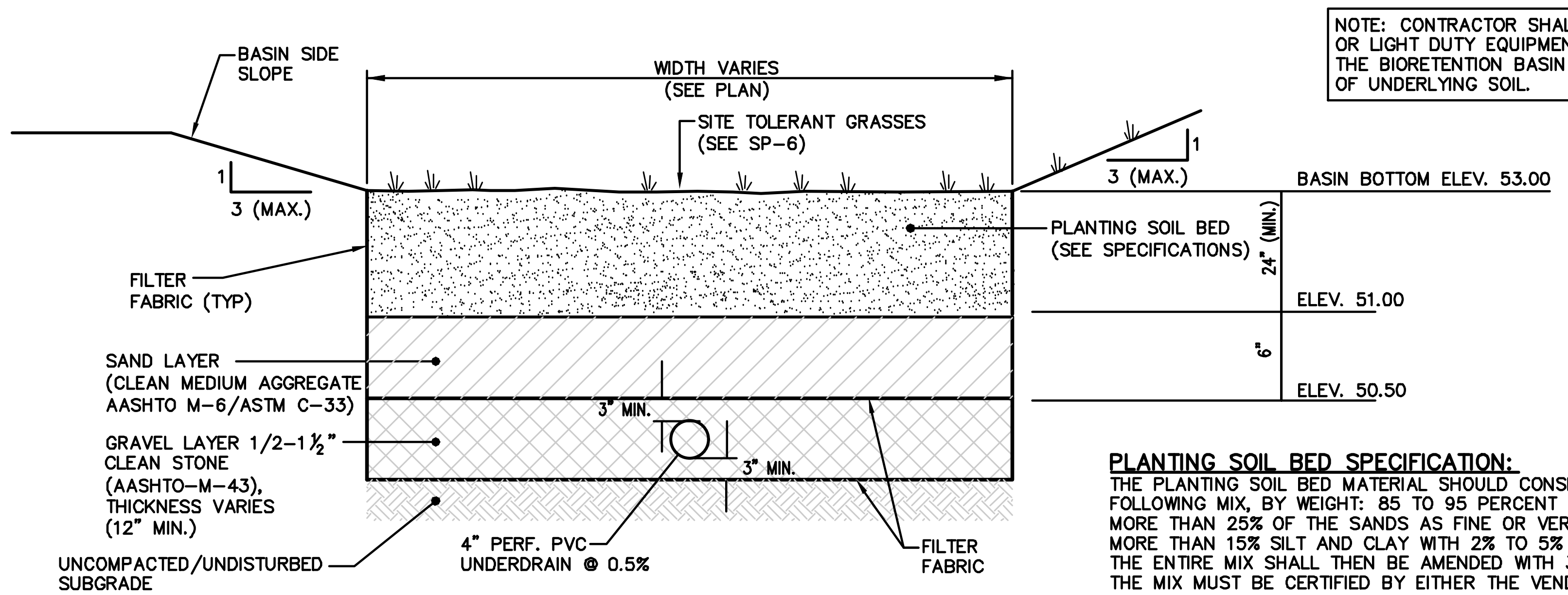
BASIN SIDE SLOPE
WIDTH VARIES (SEE PLAN)
SITE TOLERANT GRASSES (SEE SP-6)
1
3 (MAX.)
1
3 (MAX.)
BASIN BOTTOM ELEV. 53.00
FILTER FABRIC (TYP)
PLANTING SOIL BED (SEE SPECIFICATIONS)
24" (MIN.)
ELEV. 51.00
6"
ELEV. 50.50
SAND LAYER (CLEAN MEDIUM AGGREGATE AASHTO M-6/ASTM C-33)
GRAVEL LAYER 1/2-1½" CLEAN STONE (AASHTO-M-43), THICKNESS VARIES (12" MIN.)
3" MIN.
3" MIN.
UNCOMPACTED/UNDISTURBED SUBGRADE
4" PERF. PVC UNDERDRAIN @ 0.5%
FILTER FABRIC

PLANTING SOIL BED SPECIFICATION:
THE PLANTING SOIL BED MATERIAL SHOULD CONSIST OF THE FOLLOWING MIX, BY WEIGHT: 85 TO 95 PERCENT SANDS, WITH NO MORE THAN 25% OF THE SANDS AS FINE OR VERY FINE SANDS; NO MORE THAN 15% SILT AND CLAY WITH 2% TO 5% CLAY CONTENT. THE ENTIRE MIX SHALL THEN BE AMENDED WITH 3 TO 7% ORGANICS. THE MIX MUST BE CERTIFIED BY EITHER THE VENDOR WHO PREMIXES THE SOIL OR BY A PROFESSIONAL ENGINEER LICENSED BY THE STATE OF NEW JERSEY PRESENT DURING ANY ONSITE SOIL MATERIAL MIXING. THE MATERIAL'S pH SHOULD RANGE FROM 5.5 TO 6.5. THE MATERIAL SHALL BE PLACED IN 12 TO 18 INCH LIFTS.

BIORETENTION BASIN SECTION DETAIL

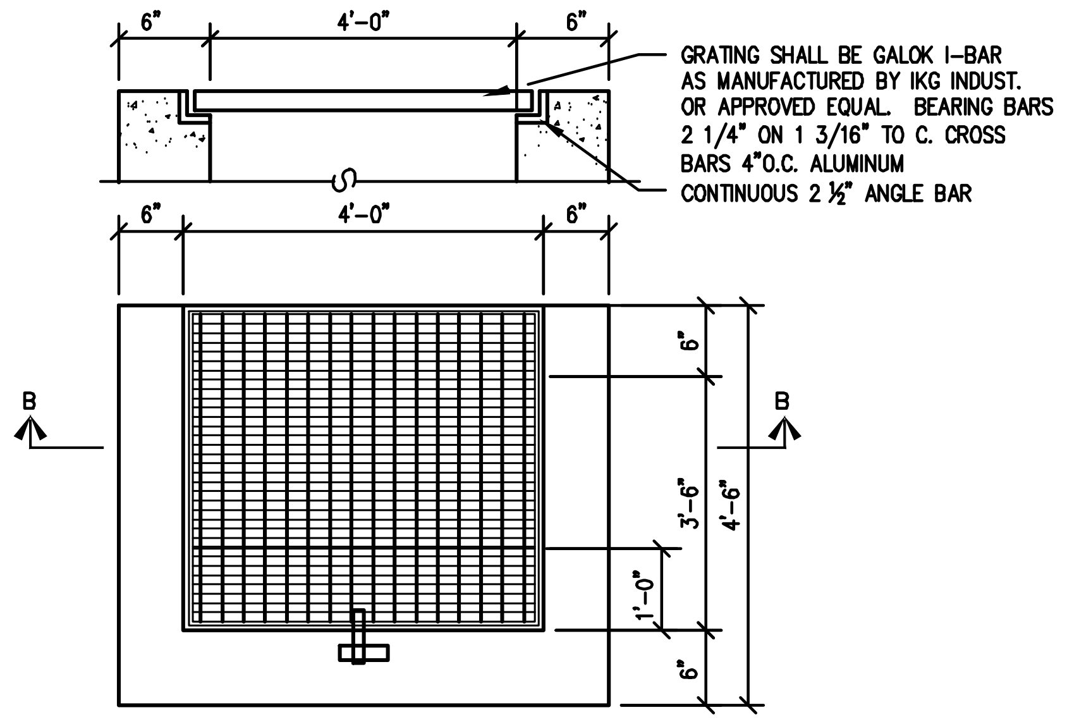
6"
4'-0"
6"
GRATING SHALL BE GALOK I-BAR AS MANUFACTURED BY IKG INDUST. OR APPROVED EQUAL. BEARING BARS 2 1/4" ON 1 3/16" TO C. CROSS BARS 4"O.C. ALUMINUM
CONTINUOUS 2 ½" ANGLE BAR
6"
4'-0"
6"
B
B
6"
3'-6"
4'-6"
1'-0"
6"

OUTLET STRUCTURE TOP GRATING

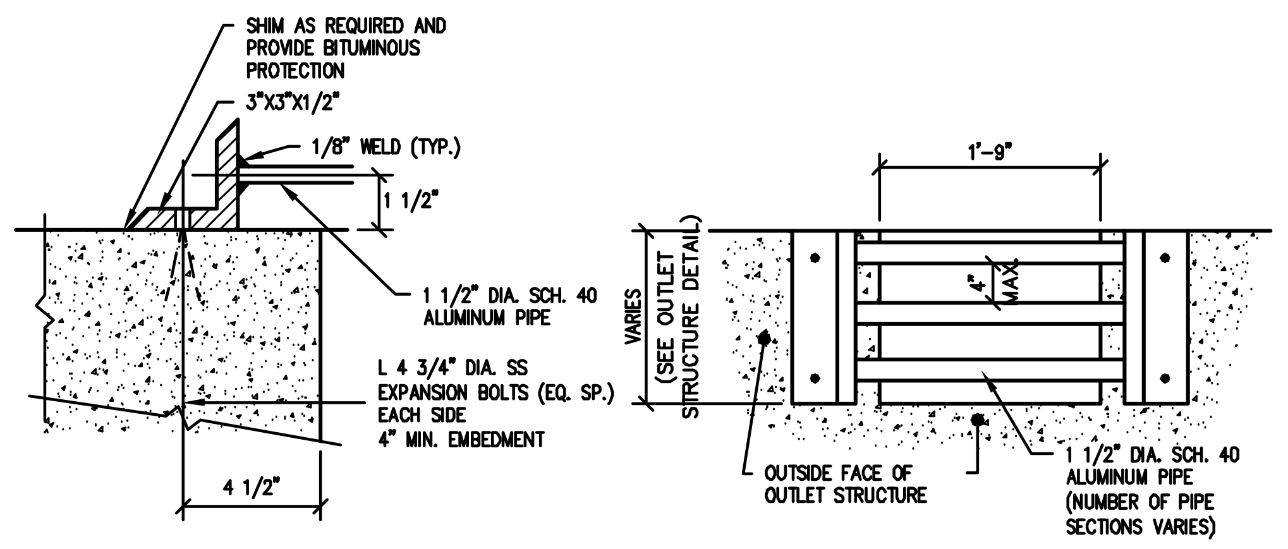
SHIM AS REQUIRED AND PROVIDE BITUMINOUS PROTECTION
3"X3"X1/2"
1/8" WELD (TYP.)
1 1/2"
1 1/2" DIA. SCH. 40 ALUMINUM PIPE
L 4 3/4" DIA. SS EXPANSION BOLTS (EQ. SP.) EACH SIDE 4" MIN. EMBEDMENT
4 1/2"
1'-9"
VARIES (SEE OUTLET STRUCTURE DETAIL)
4" MAX.
OUTSIDE FACE OF OUTLET STRUCTURE
1 1/2" DIA. SCH. 40 ALUMINUM PIPE (NUMBER OF PIPE SECTIONS VARIES)

WEIR TRASH RACK

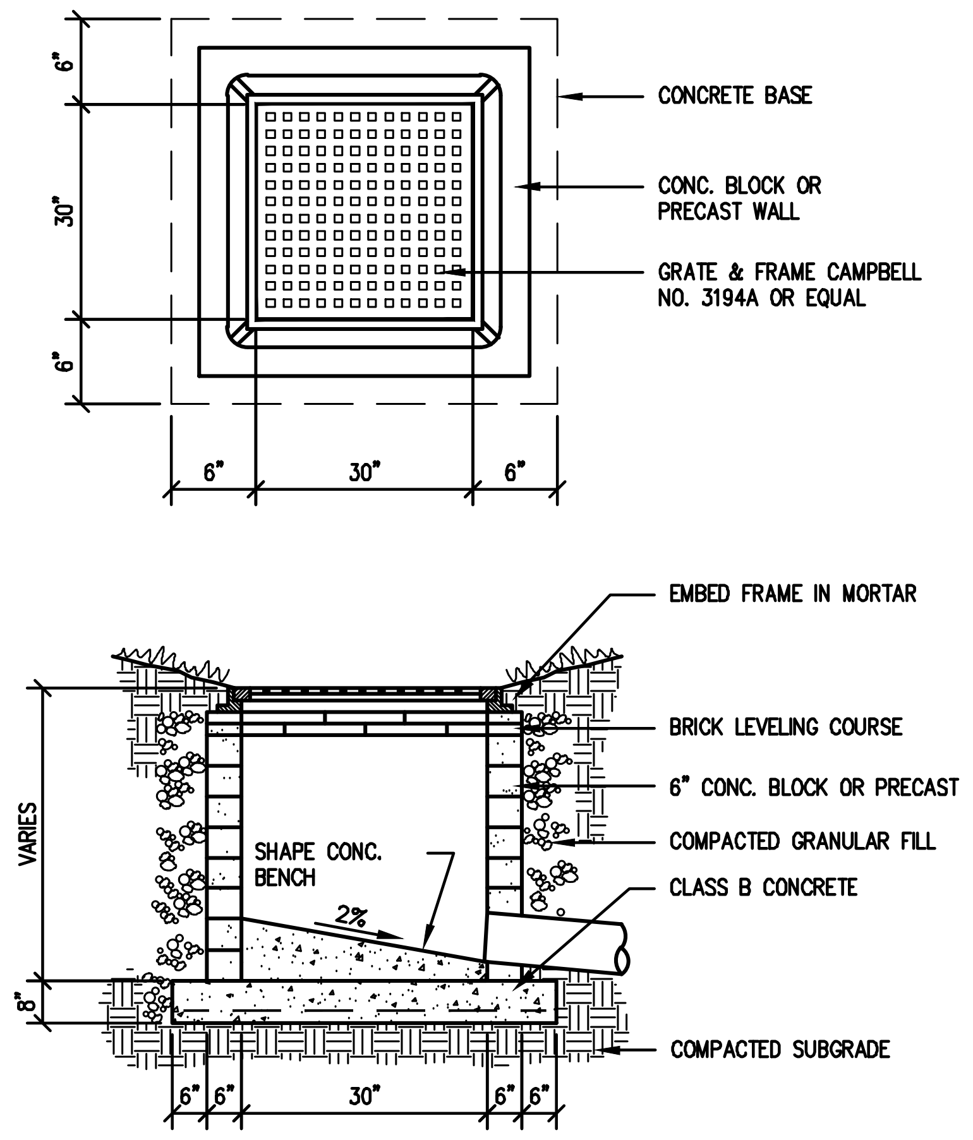
6"
30"
6"
CONCRETE BASE
CONC. BLOCK OR PRECAST WALL
GRATE & FRAME CAMPBELL NO. 3194A OR EQUAL
6"
30"
6"
EMBED FRAME IN MORTAR
BRICK LEVELING COURSE
6" CONC. BLOCK OR PRECAST
COMPACTED GRANULAR FILL
CLASS B CONCRETE
VARIES
SHAPE CONC. BENCH
2%
8"
COMPACTED SUBGRADE
6"
6"
30"
6"
6"

NOTES:
1) ALL INLETS SHALL BE CONSTRUCTED IN ACCORDANCE WITH CURRENT NJDOT STANDARD SPECIFICATIONS FOR ROAD AND BRIDGE CONSTRUCTION AND ITS AMENDMENTS.
2) IF BLOCK INLETS PROVIDED, SHALL BE MULTIPLEX BLOCK, WITH STAGGERED, MORTARED JOINTS. INTERIOR AND EXTERIOR WALLS SHALL ALSO BE PLASTERED WITH 1/2" MORTAR.
3) PROVIDE POLYPROPYLENE STEPS AT 12" O.C.

LAWN INLET W/ SQUARE GRATE

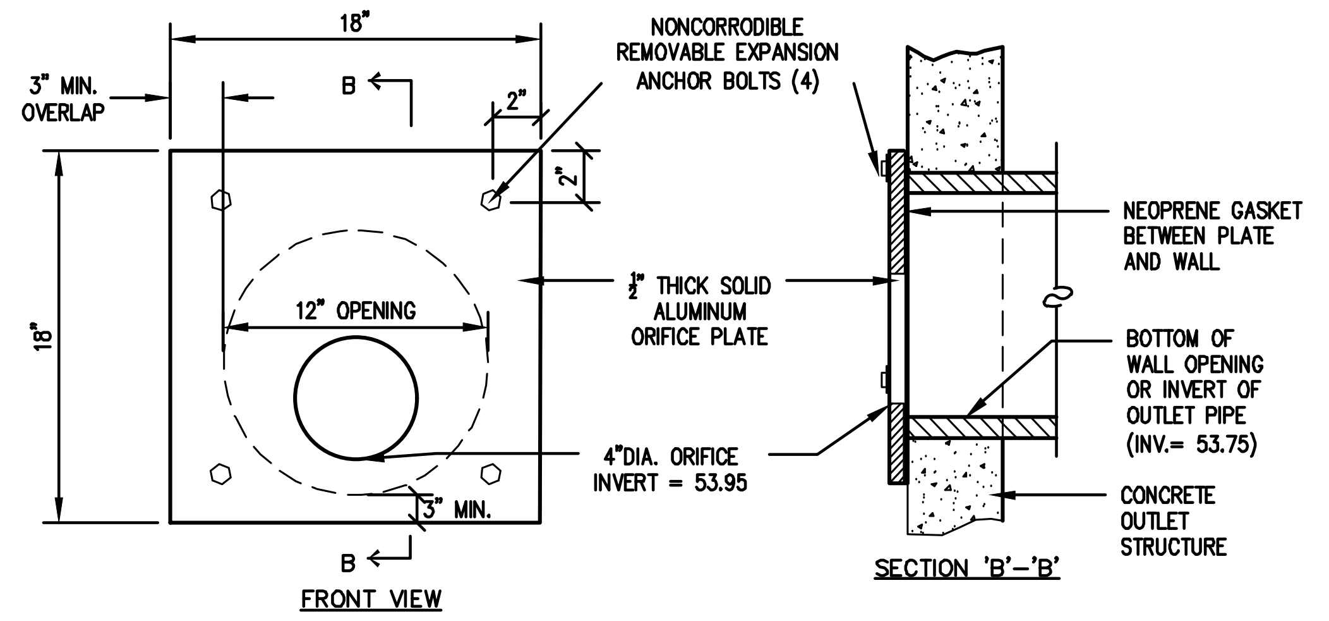
18"
3" MIN. OVERLAP
B
2"
2"
NONCORRODIBLE REMOVABLE EXPANSION ANCHOR BOLTS (4)
18"
12" OPENING
½" THICK SOLID ALUMINUM ORIFICE PLATE
4"DIA. ORIFICE INVERT = 53.95
3" MIN.
B
FRONT VIEW
NEOPRENE GASKET BETWEEN PLATE AND WALL
BOTTOM OF WALL OPENING OR INVERT OF OUTLET PIPE (INV.= 53.75)
CONCRETE OUTLET STRUCTURE
SECTION 'B'-'B'

NOTES:

1. SHOP DRAWINGS SHALL BE SUBMITTED TO THE ENGINEERING DEPARTMENT FOR REVIEW AND APPROVAL.

2. THE AVERAGE VELOCITY FLOW THROUGH A CLEAN TRASH RACK IS NOT TO EXCEED 2.5 FEET PER SECOND UNDER THE FULL RANGE OF STAGE AND DISCHARGE. VELOCITY IS TO BE COMPUTED ON THE BASIS OF THE NET AREA OF THE OPENING THROUGH THE RACK.

3. TRASH RACKS AND OVERFLOW GRATES SHALL BE CONSTRUCTED AND INSTALLED TO BE RIGID, DURABLE AND CORROSION RESISTANT, AND SHALL BE DESIGNED TO WITHSTAND A PERPENDICULAR LIVE LOADING OF 300 POUNDS PER SQUARE FOOT.

ORIFICE PLATE

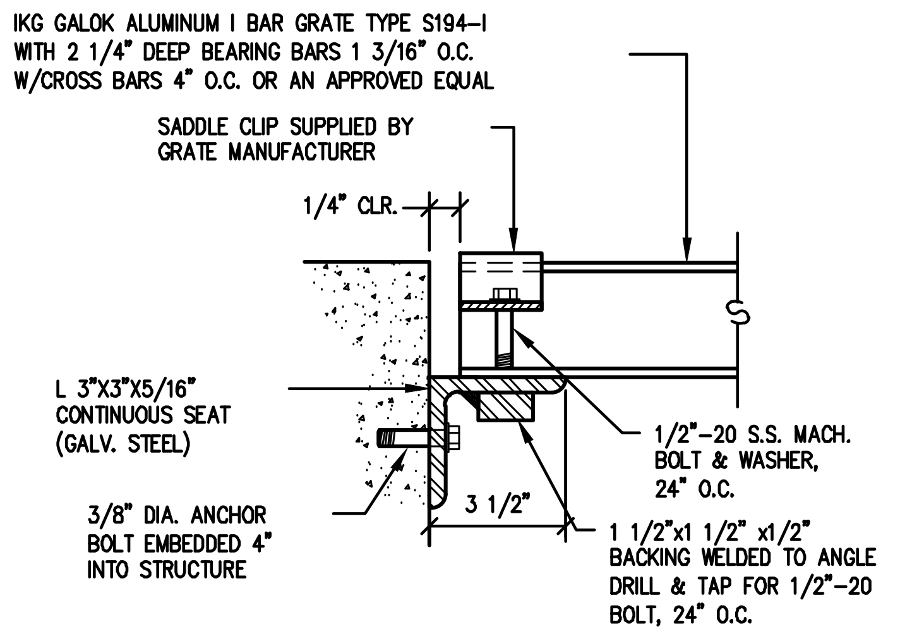
IKG GALOK ALUMINUM I BAR GRATE TYPE S194-I WITH 2 1/4" DEEP BEARING BARS 1 3/16" O.C. W/CROSS BARS 4" O.C. OR AN APPROVED EQUAL
SADDLE CLIP SUPPLIED BY GRATE MANUFACTURER
1/4" CLR.
L 3"X3"X5/16" CONTINUOUS SEAT (GALV. STEEL)
1/2"-20 S.S. MACH. BOLT & WASHER, 24" O.C.
3/8" DIA. ANCHOR BOLT EMBEDDED 4" INTO STRUCTURE
3 1/2"
1 1/2"x1 1/2" x1/2" BACKING WELDED TO ANGLE DRILL & TAP FOR 1/2"-20 BOLT, 24" O.C.

DETAIL 'A'

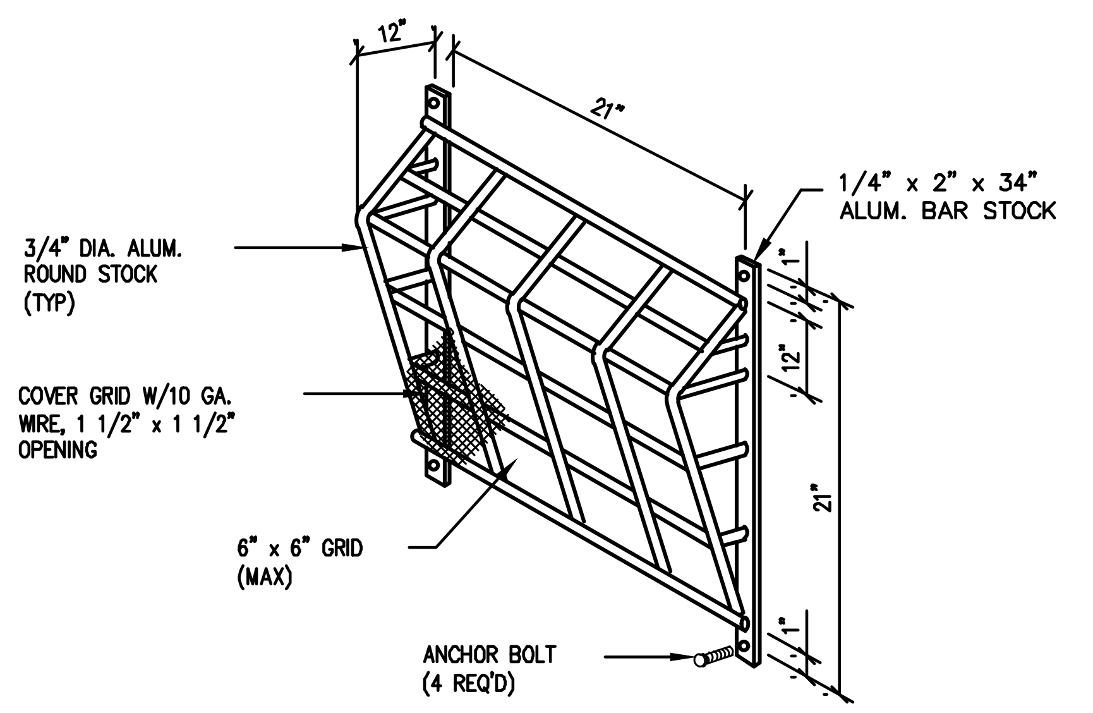
12"
21"
1/4" x 2" x 34" ALUM. BAR STOCK
3/4" DIA. ALUM. ROUND STOCK (TYP)
1"
12"
COVER GRID W/10 GA. WIRE, 1 1/2" x 1 1/2" OPENING
21"
6" x 6" GRID (MAX)
1"
ANCHOR BOLT (4 REQ'D)

TRASH RACK FOR 4" ORIFICE

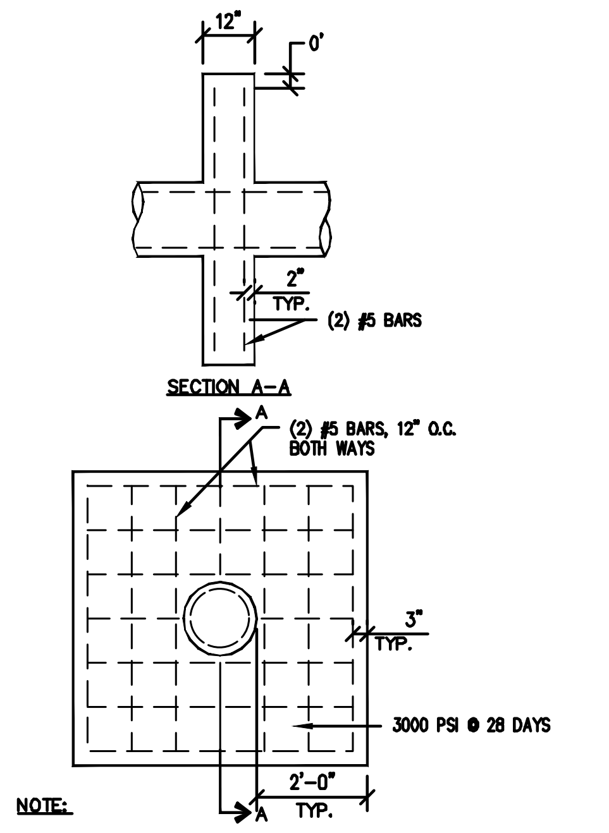
12"
0'
2" TYP.
(2) #5 BARS
SECTION A-A
A
(2) #5 BARS, 12" O.C. BOTH WAYS
3" TYP.
3000 PSI @ 28 DAYS
2'-0" TYP.
A

NOTE:
PRIOR TO THE CONSTRUCTION OF THE ANTI-SEEP COLLAR, THE OUTSIDE OF THE PIPE SHOULD BE CLEANED AND A BONDING AGENT APPLIED TO THE COLLAR AREA.

ANTI-SEEP COLLAR

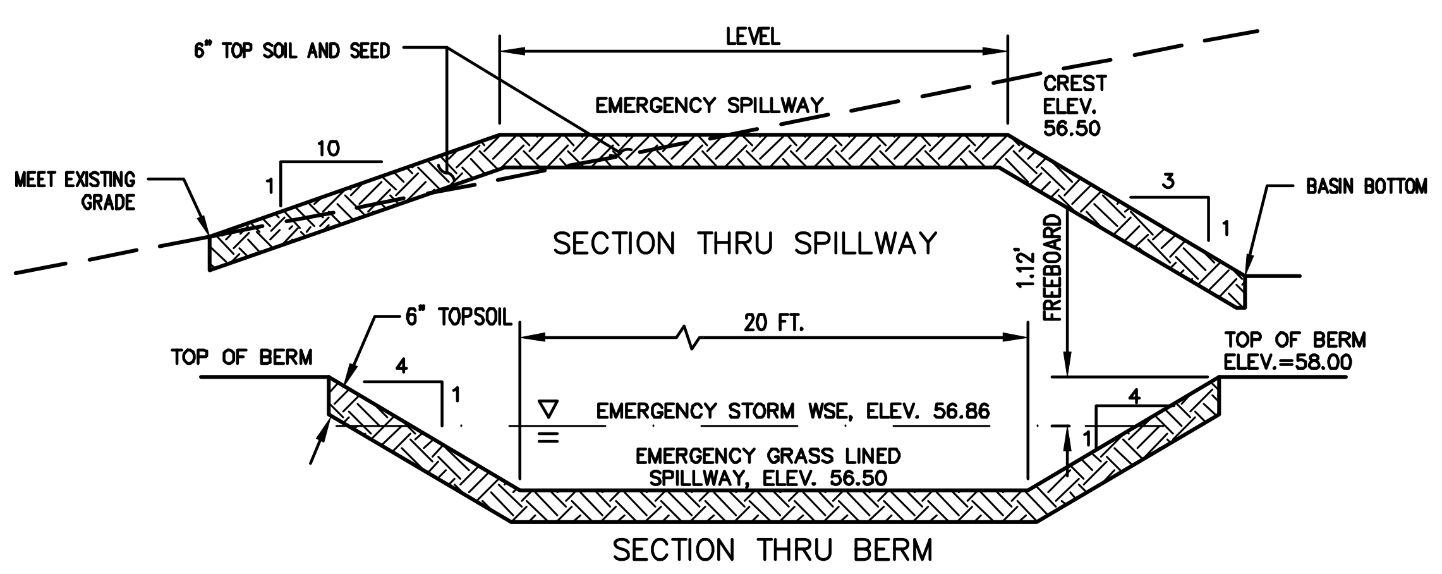
LEVEL
6" TOP SOIL AND SEED
EMERGENCY SPILLWAY
CREST ELEV. 56.50
10
1
MEET EXISTING GRADE
3
1
BASIN BOTTOM
SECTION THRU SPILLWAY
1.12' FREEBOARD
6" TOPSOIL
20 FT.
TOP OF BERM
4
1
TOP OF BERM ELEV.=58.00
EMERGENCY STORM WSE, ELEV. 56.86
4
1
EMERGENCY GRASS LINED SPILLWAY, ELEV. 56.50
SECTION THRU BERM

EMERGENCY SPILLWAY WITH GRASS COVER

N.T.S.

I.D.	18"
R	9"
S	24"
T	24"
U	48"
V	34"

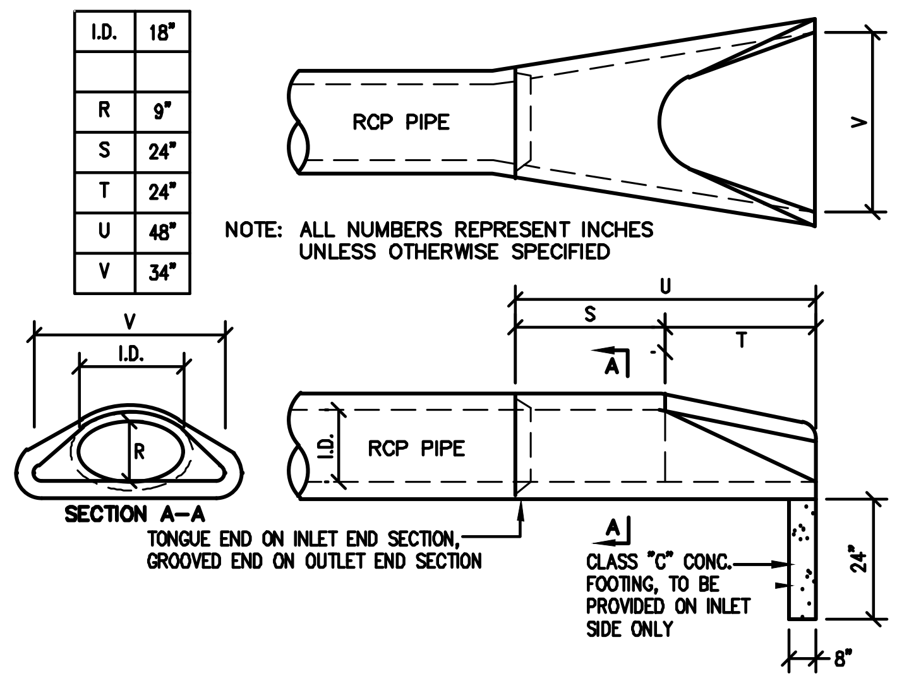
RCP PIPE
V
U
S
T
A
V
I.D.
R
SECTION A-A
I.D.
RCP PIPE
TONGUE END ON INLET END SECTION, GROOVED END ON OUTLET END SECTION
A
CLASS "C" CONC. FOOTING, TO BE PROVIDED ON INLET SIDE ONLY
24"
8"

NOTE: ALL NUMBERS REPRESENT INCHES UNLESS OTHERWISE SPECIFIED

FLARED END SECTION

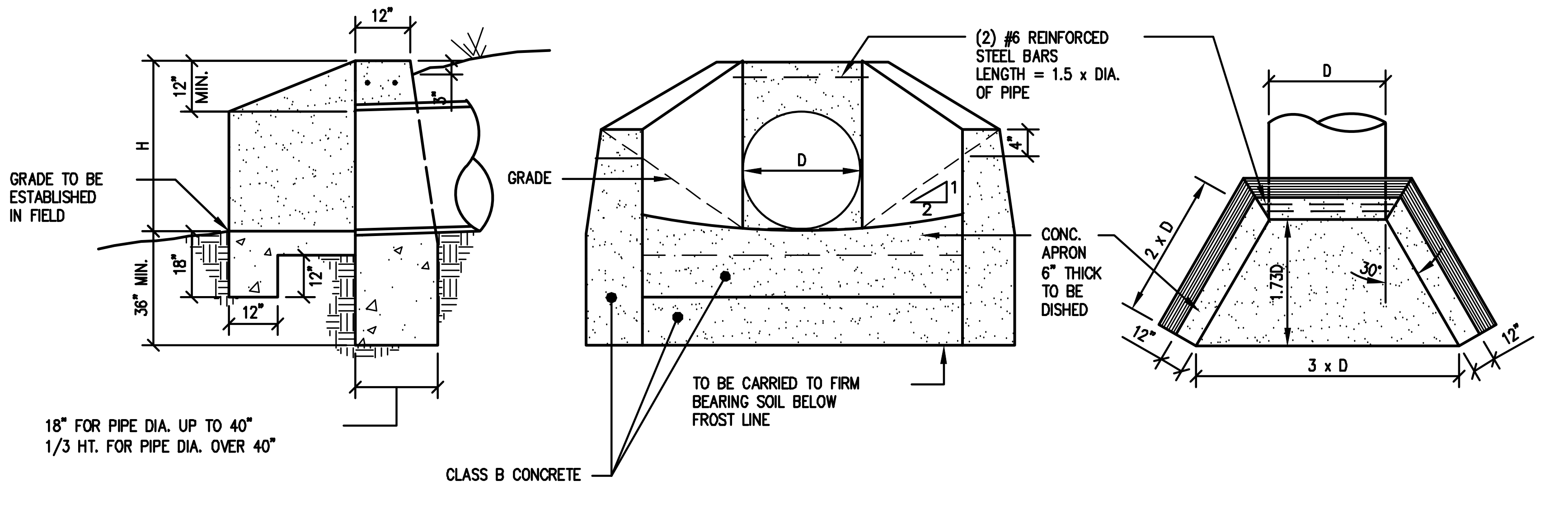
12"
12" MIN.
3"
H
GRADE TO BE ESTABLISHED IN FIELD
18"
12"
36" MIN.
12"
18" FOR PIPE DIA. UP TO 40"
1/3 HT. FOR PIPE DIA. OVER 40"
GRADE
D
1
2
(2) #6 REINFORCED STEEL BARS LENGTH = 1.5 x DIA. OF PIPE
4"
CONC. APRON 6" THICK TO BE DISHED
TO BE CARRIED TO FIRM BEARING SOIL BELOW FROST LINE
CLASS B CONCRETE
D
2 x D
1.73D
30°
12"
3 x D
12"

NOTES:

1) ALL EDGES TO BE CHAMFERED 1".

2) THE RUBBING OF HEADWALLS TO REMOVE FORM MARKS, AS REQUIRED IN THE NJDOT SPECIFICATIONS FOR CONCRETE. STRUCTURES WILL NOT BE REQUIRED FOR HEADWALLS AT THE BOTTOM OF EMBANKMENTS IN RURAL AREAS.

3) FOR SLOPE DRAIN HEADWALLS, DIMENSIONS AND APRON GRADES SHALL BE SET BY THE ENGINEER.

4) FOR MORE THAN ONE PIPE, SET THE PIPES A MINIMUM OF ONE FOOT APART (OUTSIDE BARREL TO OUTSIDE BARREL); THERE SHALL BE 12" ABOVE THE TOP OF A PIPE IN A WINGWALL. THE TERMINUS OF THE WINGWALL SHALL BE 2D FROM THE CENTERLINE OF THE PIPE IN A WINGWALL.

5) THE TERMINUS FOR OUTLET AND INLET APRONS SHALL BE SET BY EXTENDING THE PIPE GRADE AHEAD AND BACK, RESPECTIVELY.

6) FOR ARCH PIPE, THE SPAN SHALL BE SUBSTITUTED FOR D.

HEADWALL WITH WINGWALL

J:\ENGINEERING PROJECTS\2021\21-010 - 297 DAVIDSON AVE_CAD\DESIGN\21-010 DETAILS (R2).DWG-(1/25/22)

revisions

no.	date	description
1	10/12/21	PER SCD & TWP COMMENTS/NJDEP PERMIT PLAN
2	01/17/22	PER DEP, DRCC & COUNTY COMMENTS

LEGEND

G	GAS VALVE
Ⓖ	GAS METER
W	WATER VALVE
☼	HYDRANT
Ⓦ	WATER METER
CS ⊕	CURB STOP
FDC ○	FIRE DEPT. CONNECTION
Ⓓ	DRAINAGE MH
▬	CURB INLET
▤	LAWN INLET
Ⓢ	SANITARY MH
C.O. ○	CLEANOUT
○	BOLLARD
○S	SIGN
☼	LIGHT
Ⓜ	MAIL BOX
⊸	GUY WIRE
⊖	UTILITY POLE
Ⓔ	ELECTRIC MH
⊙	CONIFEROUS TREE
⊙	DECIDUOUS TREE
— X —	FENCE
○——○	RAILING
▭	WALL
◉	GATE POST
— W —	WATER LINE
— G —	GAS LINE
— E —	ELECTRIC LINE
— S —	SANITARY LINE
—OH—	OVERHEAD WIRES

Engineers
Landscape Architects
Land Surveyors
Planners
575 Route 28, Suite 110
Raritan, N.J. 08869
908-722-1500
Fax 908-722-7035
www.reynoldsgrp.com

The Reynolds Group Inc.

State of New Jersey
Certificate of Authorization
Number 24GA27969200
21MH00004300

F. Mitchel Ardman, P.E., P.P.
Jeffrey D. Reynolds, P.L.A.

F Mitchel Ardman
F. MITCHEL ARDMAN
N.J. PROFESSIONAL ENGINEER LIC. NO. 34317

project
ACCESS SELF STORAGE

BLOCK 502.01, LOTS 45.01 & 46.01
297 & 305 DAVIDSON AVENUE
TOWNSHIP OF FRANKLIN
SOMERSET COUNTY, NEW JERSEY

drawing title
CONSTRUCTION DETAILS

job number 21-010	drawing number 11
scale AS SHOWN	
checked by FMA	
drawn by GH	
date 08/31/2021	sheet 11 of 15

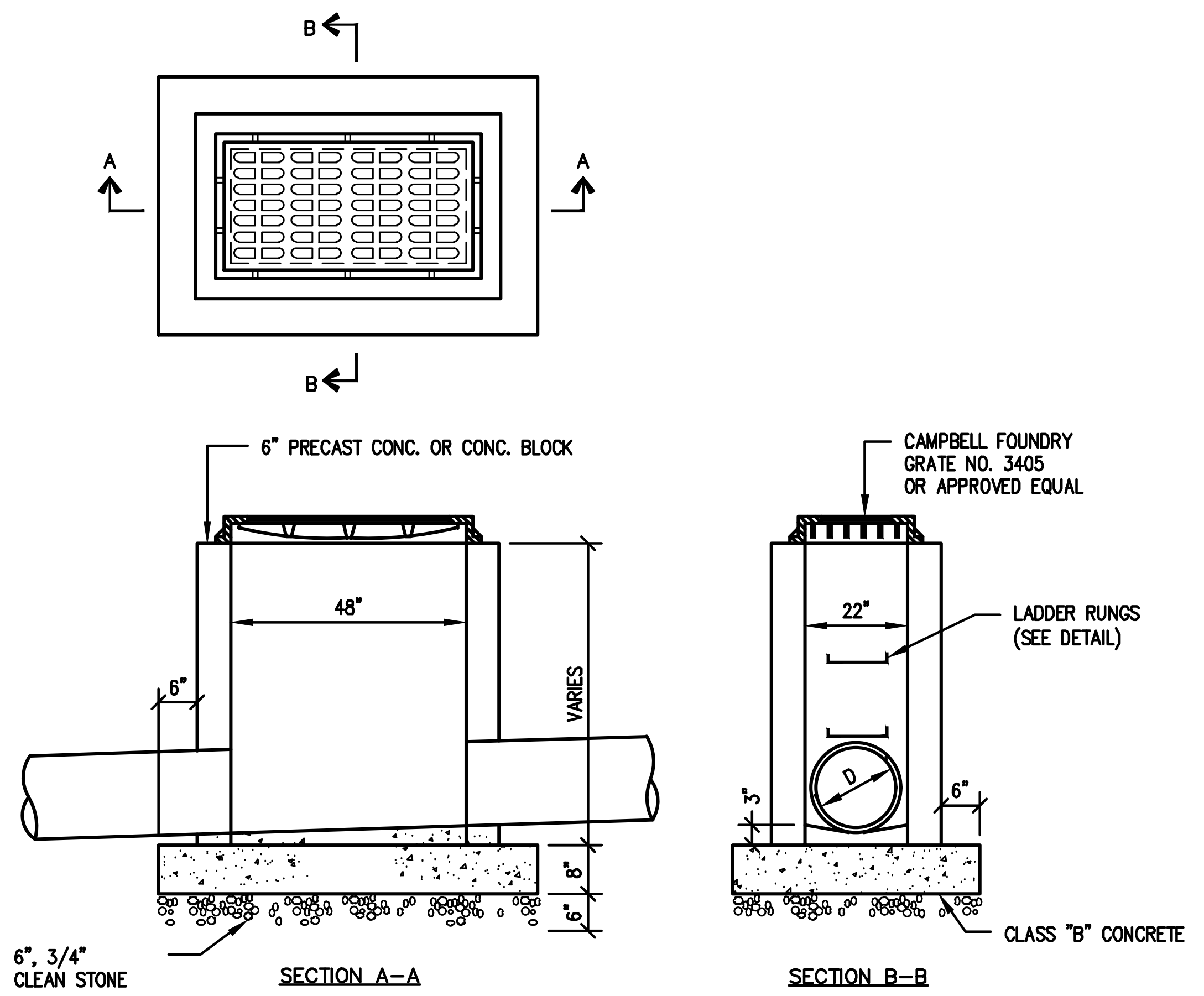
B
A
A
B
6" PRECAST CONC. OR CONC. BLOCK
48"
6"
VARIES
8"
6"
6", 3/4"
CLEAN STONE
SECTION A–A
CAMPBELL FOUNDRY
GRATE NO. 3405
OR APPROVED EQUAL
22"
LADDER RUNGS
(SEE DETAIL)
D
3"
6"
CLASS "B" CONCRETE
SECTION B–B

NOTES:
1) ALL INLETS SHALL BE CONSTRUCTED IN ACCORDANCE WITH CURRENT NJDOT STANDARD SPECIFICATIONS FOR ROAD AND BRIDGE CONSTRUCTION AND ITS AMENDMENTS.
2) GRATES SHALL BE BICYCLE SAFE AND ECO. CURB PIECE SHALL BE TYPE 'N' ECO.
3) IF BLOCK INLETS PROVIDED, SHALL BE MULTIPLEX BLOCK, WITH STAGGERED, MORTARED JOINTS. INTERIOR AND EXTERIOR WALLS SHALL ALSO BE PLASTERED WITH 1/2" MORTAR.
4) PROVIDE POLYPROPYLENE STEPS AT 12" O.C., ON WALL FACING TRAFFIC.

TYPE 'A' INLET

N.T.S.

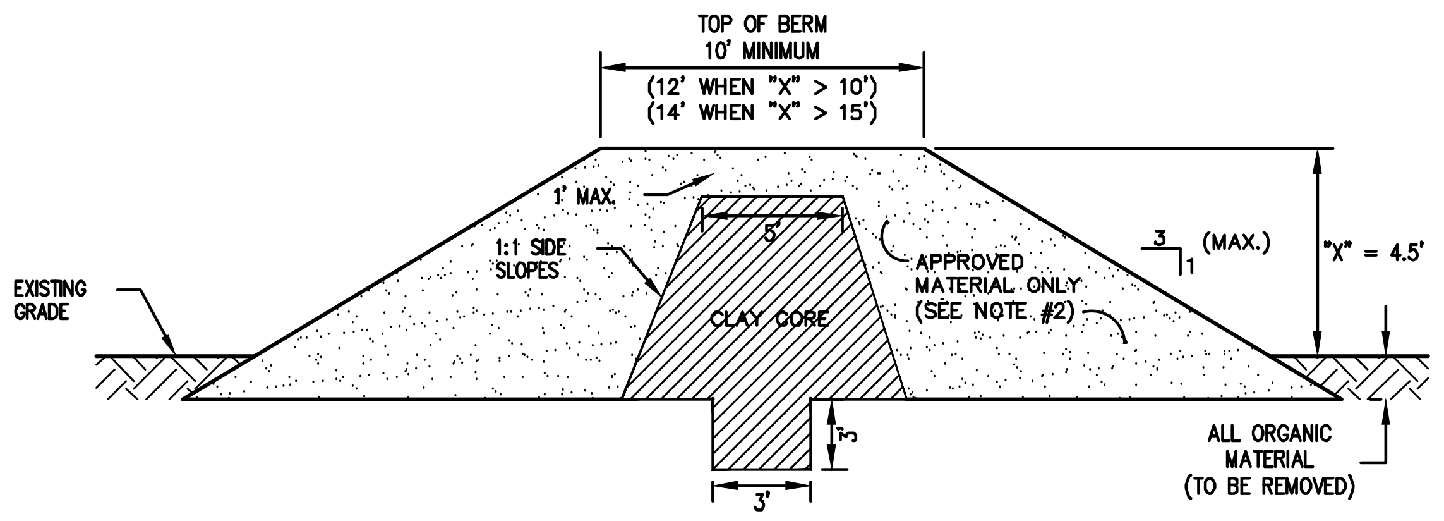
TOP OF BERM
10' MINIMUM
(12' WHEN "X" > 10')
(14' WHEN "X" > 15')
1' MAX.
5'
1:1 SIDE SLOPES
APPROVED MATERIAL ONLY (SEE NOTE #2)
3
1
(MAX.)
"X" = 4.5'
EXISTING GRADE
CLAY CORE
3'
3'
ALL ORGANIC MATERIAL (TO BE REMOVED)

NOTES:

1. THE CLAY CORE SHALL CONSIST OF COMPACTED CLAY MATERIAL (UNIFIED SOIL CLASSIFICATION "CL"). THE MATERIAL SHALL BE CERTIFIED BY A LICENSED NEW JERSEY PROFESSIONAL ENGINEER. THE MATERIAL SHALL BE APPROVED BY THE TOWNSHIP PRIOR TO INSTALLATION. A SOIL IMPORTATION PERMIT WILL BE REQUIRED, IF THE MATERIAL IS NOT FROM A CERTIFIED SOURCE.

2. THE FILL MATERIAL IN ALL EARTH DAMS AND EMBANKMENTS SHALL BE COMPACTED TO AT LEAST 95% OF THE MAXIMUM DENSITY OBTAINED FROM COMPACTION TESTS PERFORMED BY THE APPROPRIATE METHOD IN ASTM D698.

3. TREES AND OTHER VEGETATION WITH LARGE EXTENSIVE ROOT STRUCTURE SHALL NOT BE PERMITTED ON ANY DAM OR EMBANKMENT.

4. THE BASIN IS TO BE TOPSOILED WITH A MINIMUM OF 4" OF TOPSOIL AND SEEDED, INCLUDING THE BOTTOM, SIDE SLOPES AND ALL EARTHEN DAMS AND EMBANKMENTS. "TOPSOIL" IS DEFINED AS THE NATURAL, UNDISTURBED SURFACE LAYER OF SOIL HAVING MORE ORGANIC MATTER THAN SUBSEQUENT LAYERS SUITABLE FOR SATISFACTORY GROWTH AND MAINTENANCE OF PERMANENT, LOCALLY ADAPTED VEGETATION. THE MATERIAL MUST BE FRIABLE, LOAMY SOIL REASONABLY FREE OF DEBRIS, OBJECTIONABLE WEEDS, LUMPS, ROOTS, STONES, OR SIMILAR OBJECTS LARGER THAN 1–INCH IN ANY DIMENSION; HAVE A NATURAL pH OF 5.0 TO 7.5; HAVE AN ORGANIC MATTER CONTENT GREATER THAN 2.00 PERCENT; AND CONTAIN NO TOXIC SUBSTANCES WHICH MAY BE HARMFUL TO PLANT GROWTH THE SEEDING SHALL, AS A MINIMUM, CONFORM TO TYPE "A" GRASS SEED MIXTURE AS DEFINED IN THE NJDOT STANDARD SPECIFICATIONS FOR ROAD AND BRIDGE CONSTRUCTION.

EMBANKMENT AND DETENTION BASIN CLAY CORE

N.T.S.
(TO BE USED ON ALL EMBANKMENT AREAS WITH FILL GREATER THAN TWO FEET)

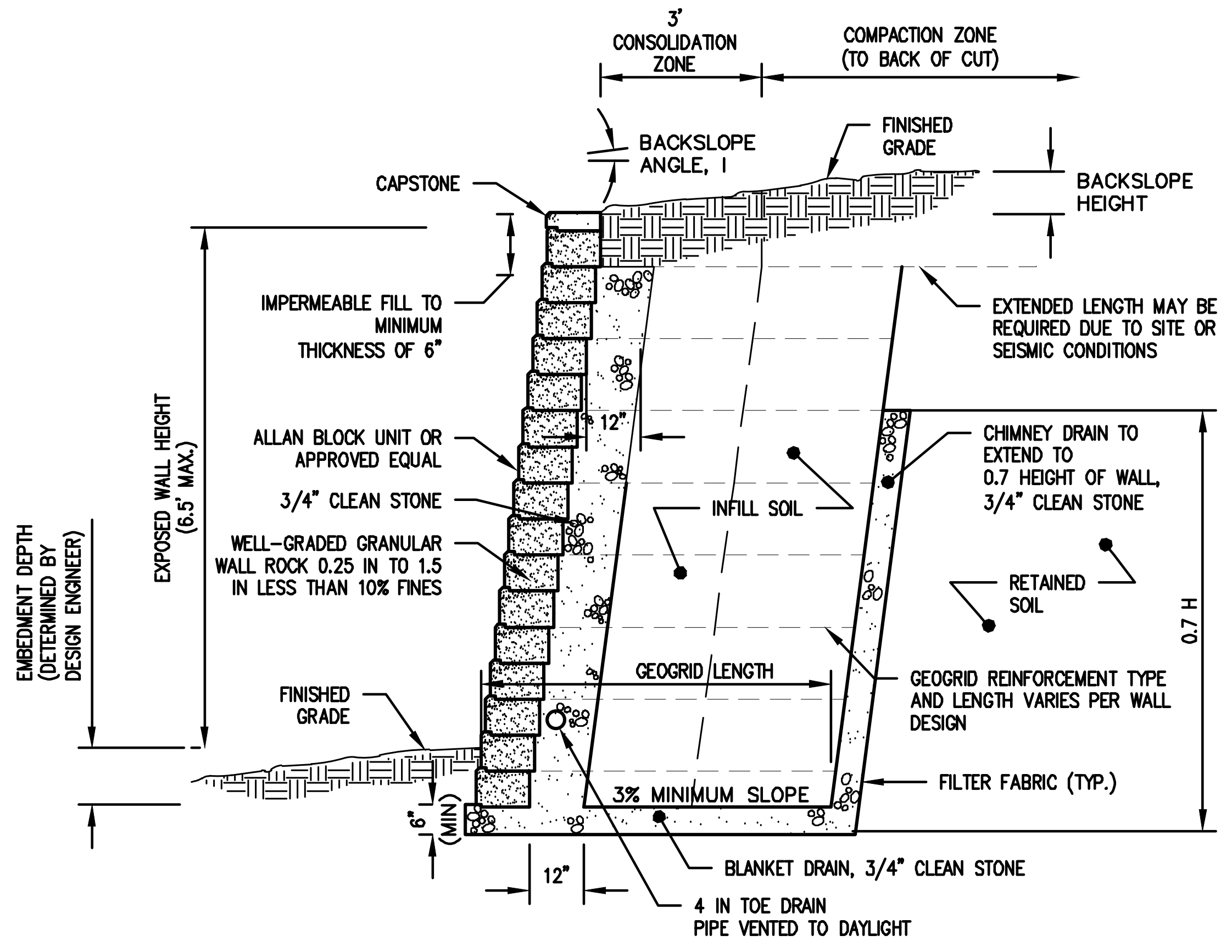
3'
CONSOLIDATION ZONE
COMPACTION ZONE
(TO BACK OF CUT)
BACKSLOPE ANGLE, I
FINISHED GRADE
BACKSLOPE HEIGHT
CAPSTONE
IMPERMEABLE FILL TO MINIMUM THICKNESS OF 6"
EXTENDED LENGTH MAY BE REQUIRED DUE TO SITE OR SEISMIC CONDITIONS
EXPOSED WALL HEIGHT (6.5' MAX.)
EMBEDMENT DEPTH (DETERMINED BY DESIGN ENGINEER)
12"
ALLAN BLOCK UNIT OR APPROVED EQUAL
CHIMNEY DRAIN TO EXTEND TO 0.7 HEIGHT OF WALL, 3/4" CLEAN STONE
3/4" CLEAN STONE
INFILL SOIL
WELL–GRADED GRANULAR WALL ROCK 0.25 IN TO 1.5 IN LESS THAN 10% FINES
RETAINED SOIL
0.7 H
GEOGRID LENGTH
GEOGRID REINFORCEMENT TYPE AND LENGTH VARIES PER WALL DESIGN
FINISHED GRADE
FILTER FABRIC (TYP.)
3% MINIMUM SLOPE
6" (MIN)
12"
BLANKET DRAIN, 3/4" CLEAN STONE
4 IN TOE DRAIN PIPE VENTED TO DAYLIGHT

NOTES:
1. A COPY OF THE MANUFACTURER'S CUT SHEETS FOR THE RETAINING WALL MUST BE SUBMITTED TO THE ENGINEER FOR APPROVAL PRIOR TO INSTALLATION.
2. STRUCTURAL CALCULATIONS AND GLOBAL STABILITY ANALYSIS, SIGNED AND SEALED BY A N.J. PROFESSIONAL ENGINEER SHALL BE SUBMITTED TO THE ENGINEER.
3. THE CONTRACTOR SHALL INSTALL THE WALL IN COMPLETE CONFORMANCE TO THE MANUFACTURER'S REQUIREMENTS AND RECOMMENDATIONS.

(FOR WALLS > 4' EXPOSED HEIGHT)

CONC. BLOCK RETAINING WALL TYPICAL SECTION

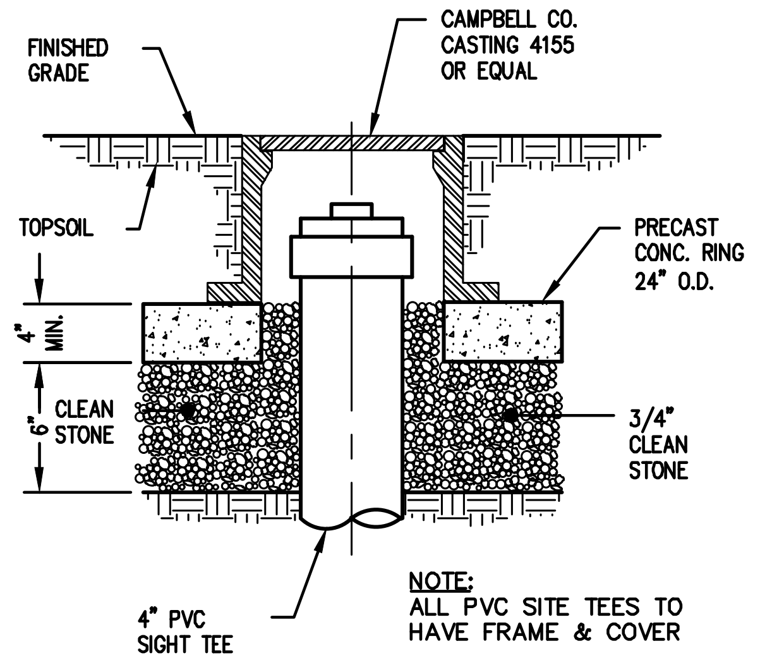
FINISHED GRADE
CAMPBELL CO. CASTING 4155 OR EQUAL
TOPSOIL
PRECAST CONC. RING 24" O.D.
4" MIN.
6" CLEAN STONE
3/4" CLEAN STONE
4" PVC SIGHT TEE

NOTE:
ALL PVC SITE TEES TO HAVE FRAME & COVER

CLEANOUT COVER

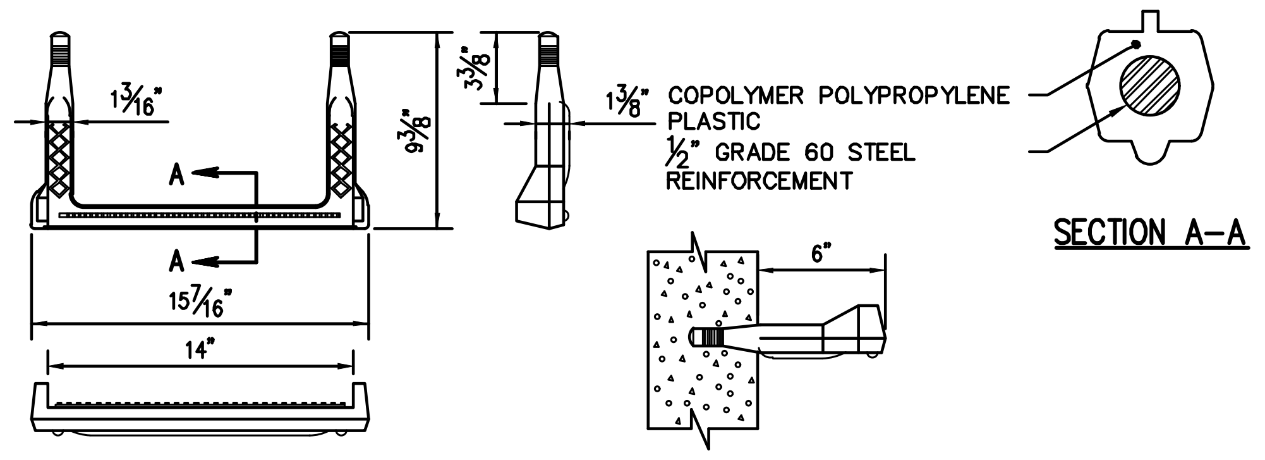
1 3/16"
9 3/8"
3 3/8"
1 3/8"
A
A
15 7/16"
14"
6"
SECTION A–A

COPOLYMER POLYPROPYLENE PLASTIC
1/2" GRADE 60 STEEL REINFORCEMENT

COPOLYMER POLYPROPYLENE PLASTIC LADDER RUNG

N.T.S.

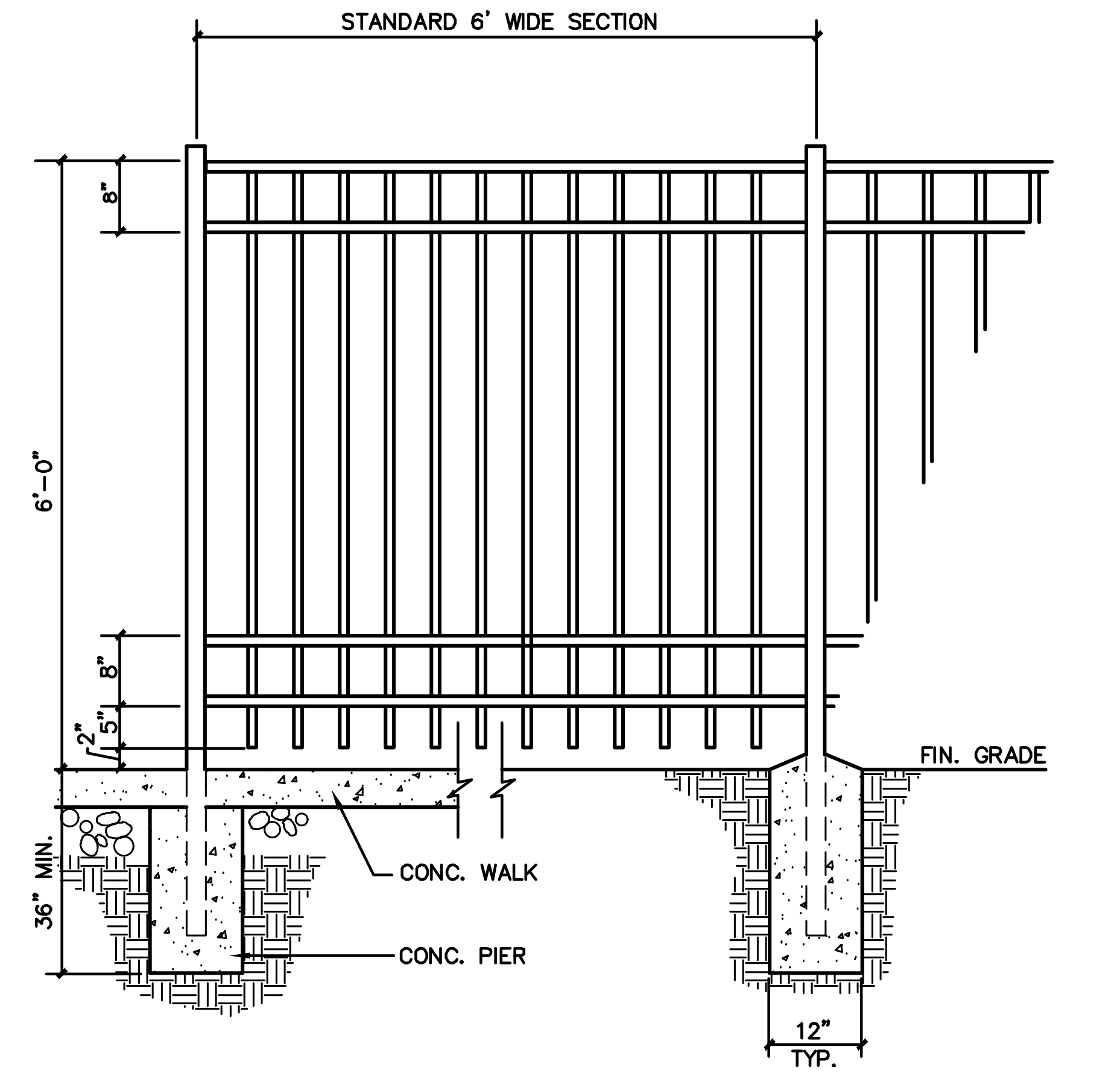
STANDARD 6' WIDE SECTION
8"
6'–0"
8"
5"
2"
36" MIN.
FIN. GRADE
CONC. WALK
CONC. PIER
12"
TYP.

COLOR: BLACK
POST LENGTH IN GROUND: 30" DEPTH, 6'–0" O.C. SPACING
1 1/8" SQ. RAILS
5/8" SQ. PICKETS
2" SQ. POSTS FOR LINE, CORNERS, ENDS
2" SQ. POSTS FOR GATE FRAMES TO 48"
2 1/2" SQ. POSTS FOR GATE FRAMES 49" TO 72"
STANDARD SECTIONS 6'–0" O.C.

TUBULAR ALUMINUM PICKET FENCE

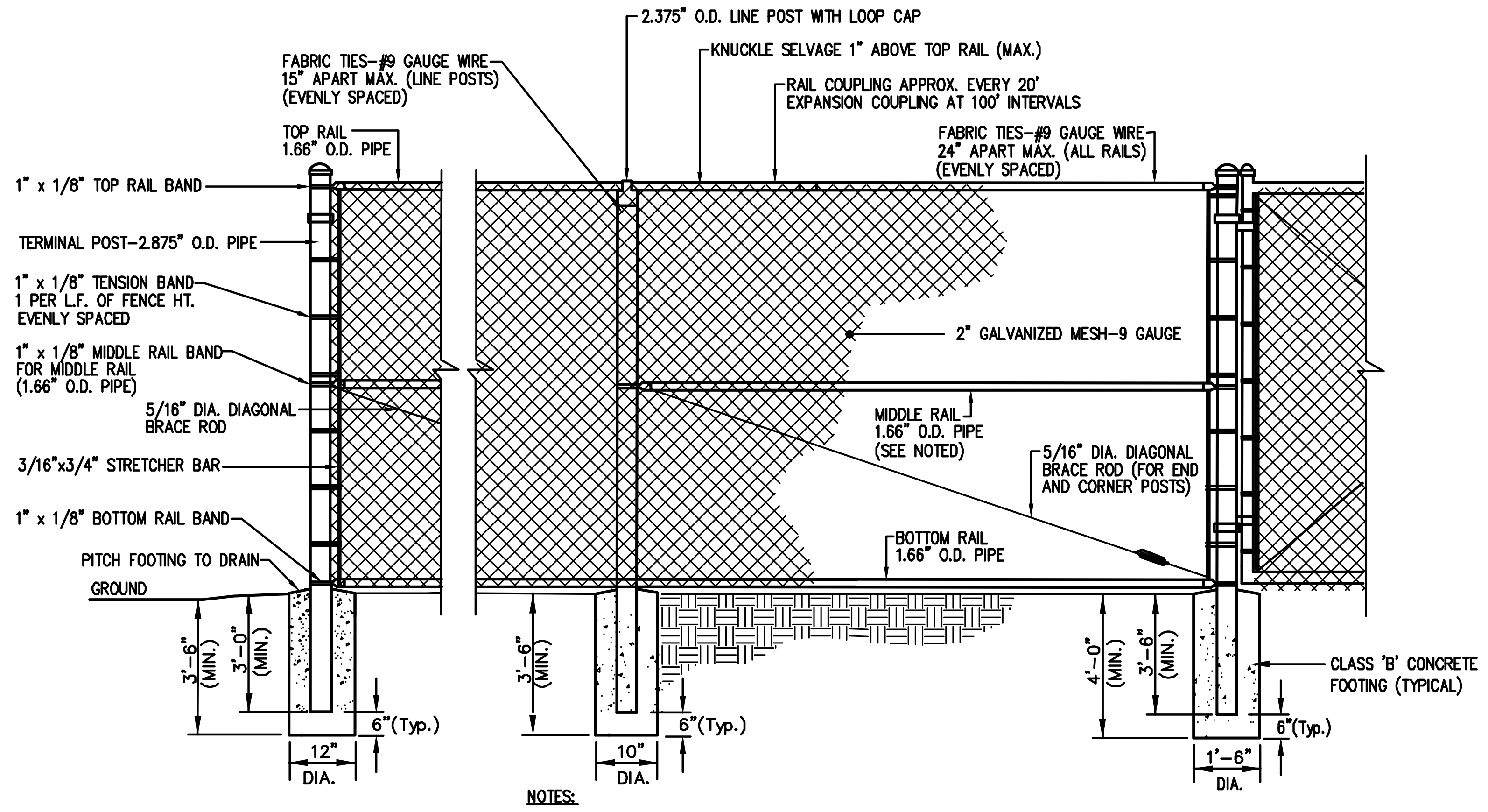
2.375" O.D. LINE POST WITH LOOP CAP
KNUCKLE SELVAGE 1" ABOVE TOP RAIL (MAX.)
FABRIC TIES–#9 GAUGE WIRE 15" APART MAX. (LINE POSTS) (EVENLY SPACED)
RAIL COUPLING APPROX. EVERY 20' EXPANSION COUPLING AT 100' INTERVALS
TOP RAIL 1.66" O.D. PIPE
FABRIC TIES–#9 GAUGE WIRE 24" APART MAX. (ALL RAILS) (EVENLY SPACED)
1" x 1/8" TOP RAIL BAND
TERMINAL POST–2.875" O.D. PIPE
1" x 1/8" TENSION BAND 1 PER L.F. OF FENCE HT. EVENLY SPACED
2" GALVANIZED MESH–9 GAUGE
1" x 1/8" MIDDLE RAIL BAND FOR MIDDLE RAIL (1.66" O.D. PIPE)
5/16" DIA. DIAGONAL BRACE ROD
MIDDLE RAIL 1.66" O.D. PIPE (SEE NOTED)
5/16" DIA. DIAGONAL BRACE ROD (FOR END AND CORNER POSTS)
3/16"x3/4" STRETCHER BAR
1" x 1/8" BOTTOM RAIL BAND
BOTTOM RAIL 1.66" O.D. PIPE
PITCH FOOTING TO DRAIN
GROUND
3'–6" (MIN.)
3'–0" (MIN.)
6"(Typ.)
12" DIA.
3'–6" (MIN.)
6"(Typ.)
10" DIA.
4'–0" (MIN.)
3'–6" (MIN.)
6"(Typ.)
1'–6" DIA.
CLASS 'B' CONCRETE FOOTING (TYPICAL)

NOTES:
1. HEIGHT OF GATE TO MATCH HEIGHT OF ADJOINING FENCE.
2. POSTS SHALL BE EVENLY SPACED A MAXIMUM OF 10 FT. ON CENTER.
3. MESH FENCE FABRIC ON EXTERIOR FACING AWAY.
4. MIDDLE RAIL TO BE INSTALLED ON ALL END (TERMINAL), CORNER & GATE POSTS. (SEE SITE PLAN FOR REQUIRED FENCE HEIGHT)

4' – 6' GALVANIZED CHAIN LINK FENCE

revisions

no.	date	description
1	10/12/21	PER SCD & TWP COMMENTS/NJDEP PERMIT PLAN
2	01/17/22	PER DEP, DRCC & COUNTY COMMENTS

LEGEND

G	GAS VALVE
Ⓖ	GAS METER
W	WATER VALVE
✲	HYDRANT
Ⓦ	WATER METER
CS ⊕	CURB STOP
FDC ○	FIRE DEPT. CONNECTION
Ⓓ	DRAINAGE MH
▬	CURB INLET
▤	LAWN INLET
Ⓢ	SANITARY MH
C.O. ○	CLEANOUT
○	BOLLARD
○S	SIGN
☼	LIGHT
Ⓜ	MAIL BOX
○—	GUY WIRE
—⊖—	UTILITY POLE
Ⓔ	ELECTRIC MH
⊙	CONIFEROUS TREE
⊙	DECIDUOUS TREE
— X —	FENCE
—○——○—	RAILING
▭	WALL
◉	GATE POST
— W —	WATER LINE
— G —	GAS LINE
— E —	ELECTRIC LINE
— S —	SANITARY LINE
—OH—	OVERHEAD WIRES

Engineers
Landscape Architects
Land Surveyors
Planners
575 Route 28, Suite 110
Raritan, N.J. 08869
908–722–1500
Fax 908–722–7035
www.reynoldsgrp.com

The Reynolds
Group Inc.

State of New Jersey
Certificate of Authorization
Number 24GA27969200
21MH00004300

F. Mitchel Ardman, P.E., P.P.
Jeffrey D. Reynolds, P.L.A.

F Mitchel Ardman
F. MITCHEL ARDMAN
N.J. PROFESSIONAL ENGINEER LIC. NO. 34317

project

ACCESS SELF STORAGE

BLOCK 502.01, LOTS 45.01 & 46.01
297 & 305 DAVIDSON AVENUE
TOWNSHIP OF FRANKLIN
SOMERSET COUNTY, NEW JERSEY

drawing title

CONSTRUCTION DETAILS

job number 21–010	drawing number 12
scale AS SHOWN	
checked by FMA	
drawn by GH	
date 08/31/2021	sheet 12 of 15

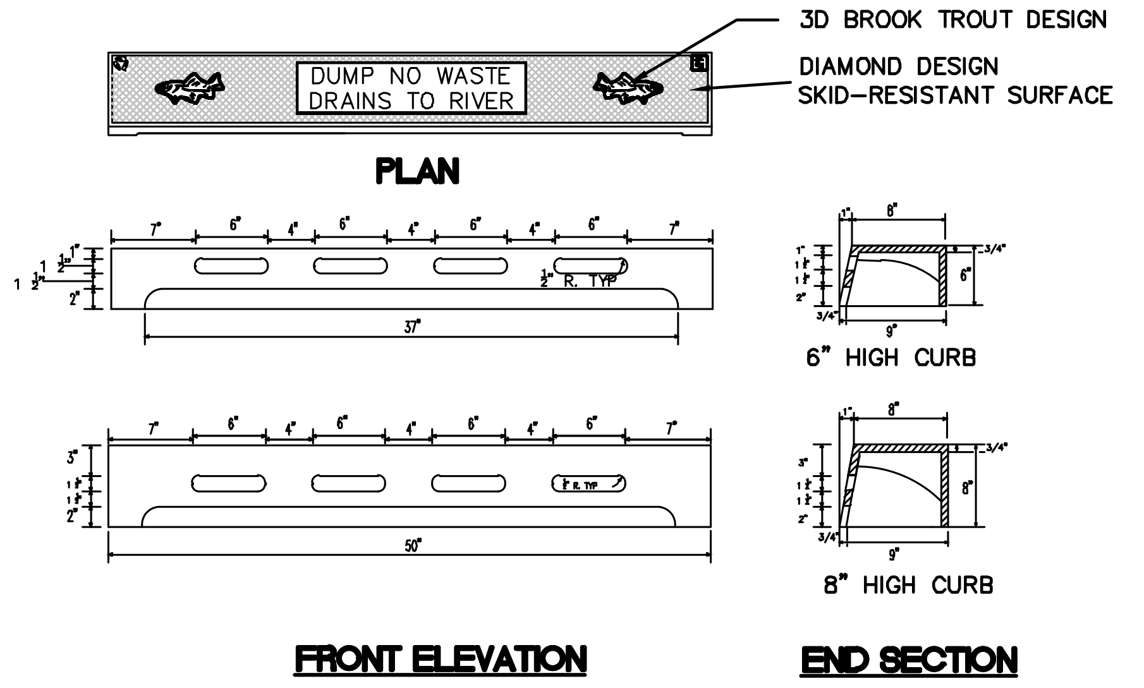
3D BROOK TROUT DESIGN
DIAMOND DESIGN SKID-RESISTANT SURFACE
DUMP NO WASTE DRAINS TO RIVER
PLAN
7" 6" 4" 6" 4" 6" 4" 6" 7"
1/2" R. TYP
37"
50"
6" HIGH CURB
8" HIGH CURB
FRONT ELEVATION
END SECTION

NOTES:

1. MATERIAL: GRAY CAST IRON ATSM A48-83, CLASS 30B
2. IN RETROFIT SITUATIONS THIS CURB PIECE WILL FIT EXISTING CAMPBELL FOUNDRY CO. MANUFACTURED CURB INLETS FOR NJDOT TYPES B, B-1, B-2, D, D-1, AND D-2
3. NAMEPLATE MESSAGE CAN BE MODIFIED TO YOUR SPECIFIC NEEDS WITHIN AREA SHOWN.
4. CASTING SUPPLIED WITHOUT SURFACE COATING

CURB PIECE TYPE "N-ECO"

CAMPBELL FOUNDRY OR APPROVED EQUAL

N.T.S.

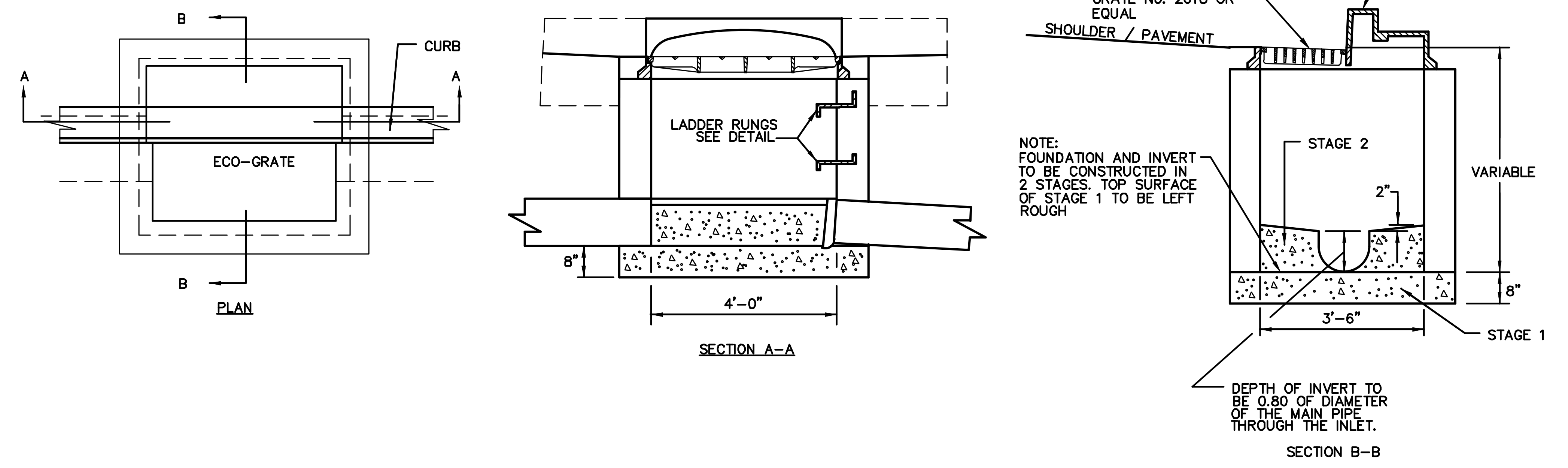
B
A
CURB
ECO-GRATE
PLAN
LADDER RUNGS SEE DETAIL
8"
4'-0"
SECTION A-A
CAMPBELL FDRY. "ECO/BICYCLE TYPE" GRATE No. 2618 OR EQUAL
TYPE "N" ECO CURB PIECE (SEE DETAIL)
SHOULDER / PAVEMENT
NOTE: FOUNDATION AND INVERT TO BE CONSTRUCTED IN 2 STAGES. TOP SURFACE OF STAGE 1 TO BE LEFT ROUGH
STAGE 2
2"
VARIABLE
8"
3'-6"
STAGE 1
DEPTH OF INVERT TO BE 0.80 OF DIAMETER OF THE MAIN PIPE THROUGH THE INLET.
SECTION B-B

INLETS, TYPE B WITH C.I. CURB PIECE-BACK-FRAME AND GRATE

N.T.S.

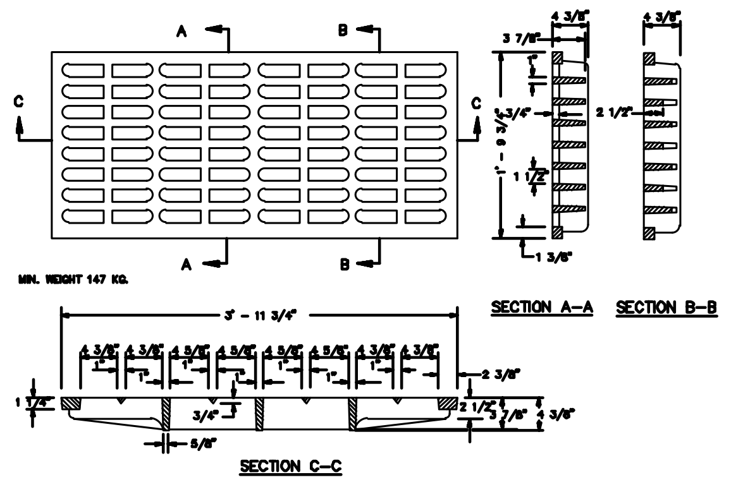
A
B
C
MIN. WEIGHT 147 KG.
3' - 11 3/4"
SECTION A-A
SECTION B-B
SECTION C-C

BICYCLE SAFE GRATE

(CAST IRON)

N.T.S.

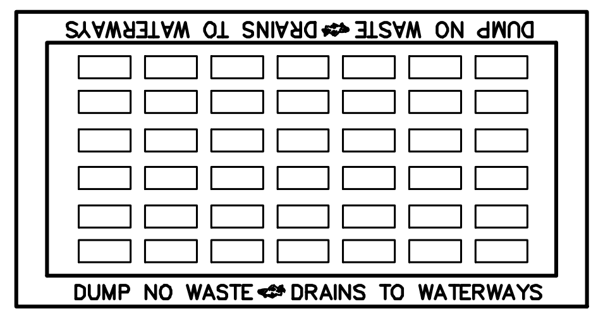
DUMP NO WASTE ⇔ DRAINS TO WATERWAYS
DUMP NO WASTE ⇔ DRAINS TO WATERWAYS

ECO-GRATE

N.T.S.

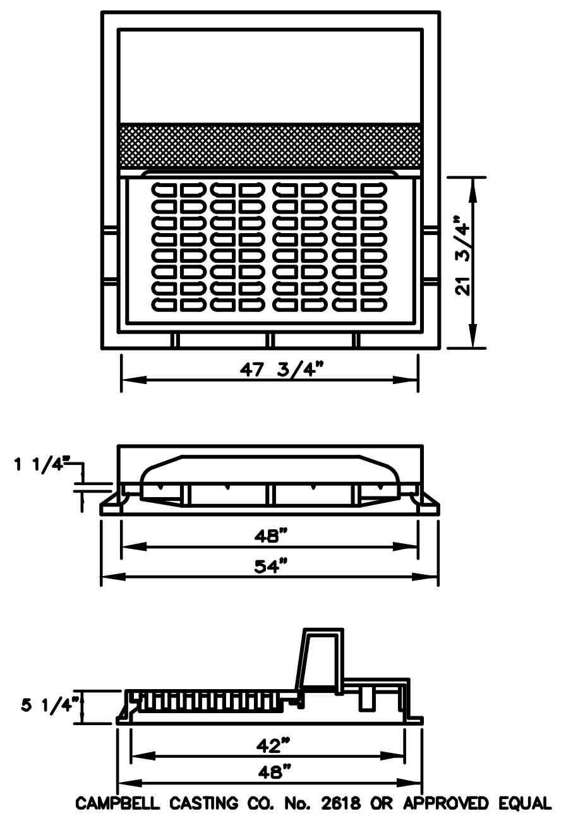
21 3/4"
47 3/4"
1 1/4"
48"
54"
5 1/4"
42"
48"
CAMPBELL CASTING CO. No. 2618 OR APPROVED EQUAL

CURB TYPE INLET FRAME

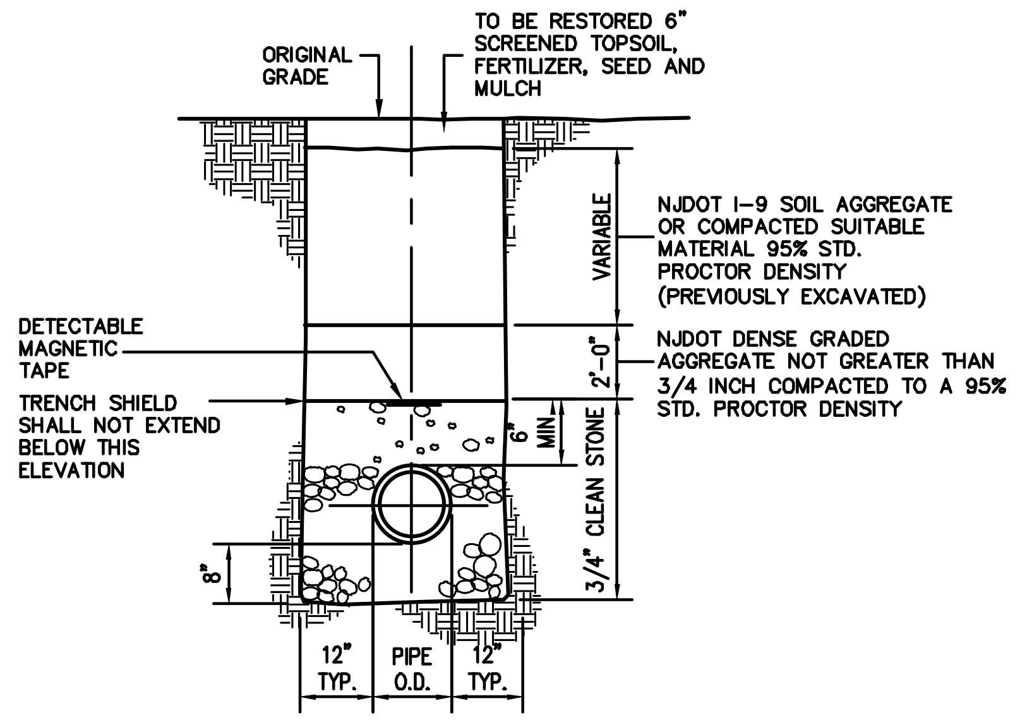
ORIGINAL GRADE
TO BE RESTORED 6" SCREENED TOPSOIL, FERTILIZER, SEED AND MULCH
VARIABLE
NJDOT I-9 SOIL AGGREGATE OR COMPACTED SUITABLE MATERIAL 95% STD. PROCTOR DENSITY (PREVIOUSLY EXCAVATED)
DETECTABLE MAGNETIC TAPE
2'-0"
NJDOT DENSE GRADED AGGREGATE NOT GREATER THAN 3/4 INCH COMPACTED TO A 95% STD. PROCTOR DENSITY
TRENCH SHIELD SHALL NOT EXTEND BELOW THIS ELEVATION
6" MIN
3/4" CLEAN STONE
8"
12" TYP.
PIPE O.D.
12" TYP.

NOTE:
COST OF ALL EQUIPMENT, LABOR AND MATERIALS TO BE INCLUDED IN THE UNIT PRICE FOR 'PIPE'. NO SEPARATE PAYMENTS WILL BE MADE FOR EXCAVATION AND/OR BACKFILLING. CONTRACTOR SHALL FULLY COMPLY WITH ALL OSHA REQUIREMENTS FOR TRENCHING, SHORING, AND WORK IN HAZARDOUS AREAS. ALL OTHER NOTES REMAIN IN FULL EFFECT.

CLEAN STONE IS NJDOT No. 57 CHOKED COARSE AGGREGATE 3/4". SELECT FILL IS NJDOT J-9 SOIL AGGREGATE HAVING NO COARSE GRAVELS LARGER THAN 1 1/2" IN ANY DIMENSION AND NOT MORE THAN 10% OF THE FINES PASSING 200 SIEVE.

TYPICAL TRENCH DETAIL UNDER LAWN AREA

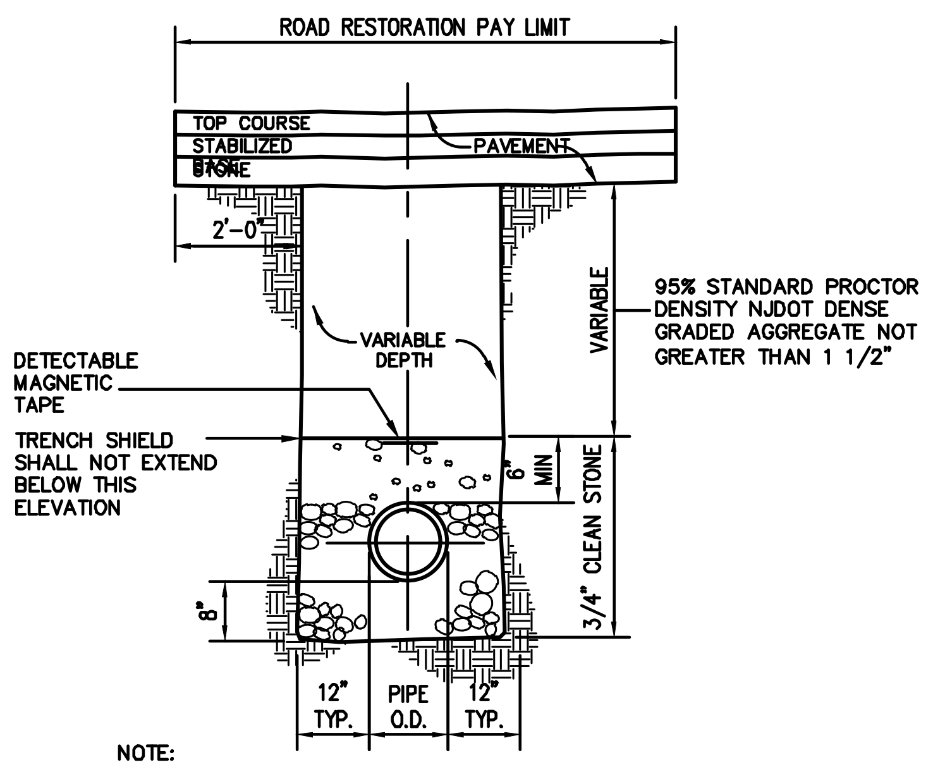
ROAD RESTORATION PAY LIMIT
TOP COURSE
STABILIZED BASE
STONE
PAVEMENT
2'-0"
VARIABLE DEPTH
VARIABLE
95% STANDARD PROCTOR DENSITY NJDOT DENSE GRADED AGGREGATE NOT GREATER THAN 1 1/2"
DETECTABLE MAGNETIC TAPE
TRENCH SHIELD SHALL NOT EXTEND BELOW THIS ELEVATION
6" MIN
3/4" CLEAN STONE
8"
12" TYP.
PIPE O.D.
12" TYP.

NOTE:
COST OF ALL EQUIPMENT, LABOR AND MATERIALS TO BE INCLUDED IN THE UNIT PRICE FOR 'PIPE'. NO SEPARATE PAYMENTS WILL BE MADE FOR EXCAVATION AND/OR BACKFILLING. CONTRACTOR SHALL FULLY COMPLY WITH ALL OSHA REQUIREMENTS FOR TRENCHING, SHORING, AND WORK IN HAZARDOUS AREAS. ALL OTHER NOTES REMAIN IN FULL EFFECT.

TYPICAL TRENCH DETAIL UNDER PAVEMENT

THE FRANKLIN TOWNSHIP DEPARTMENT OF PUBLIC WORKS MUST BE NOTIFIED 24 HOURS BEFORE THE START OF ANY WORK IN THE PUBLIC RIGHT-OF-WAY.

A TOWNSHIP ROAD OPENING PERMIT IS TO BE OBTAINED FROM THE FRANKLIN TOWNSHIP PUBLIC WORKS DEPARTMENT PRIOR TO THE INSTALLATION OF ANY UTILITY SERVICES. THE ROADWAY IS TO BE RESTORED IN ACCORDANCE WITH THE CONDITIONS OUTLINED IN THE PERMIT.

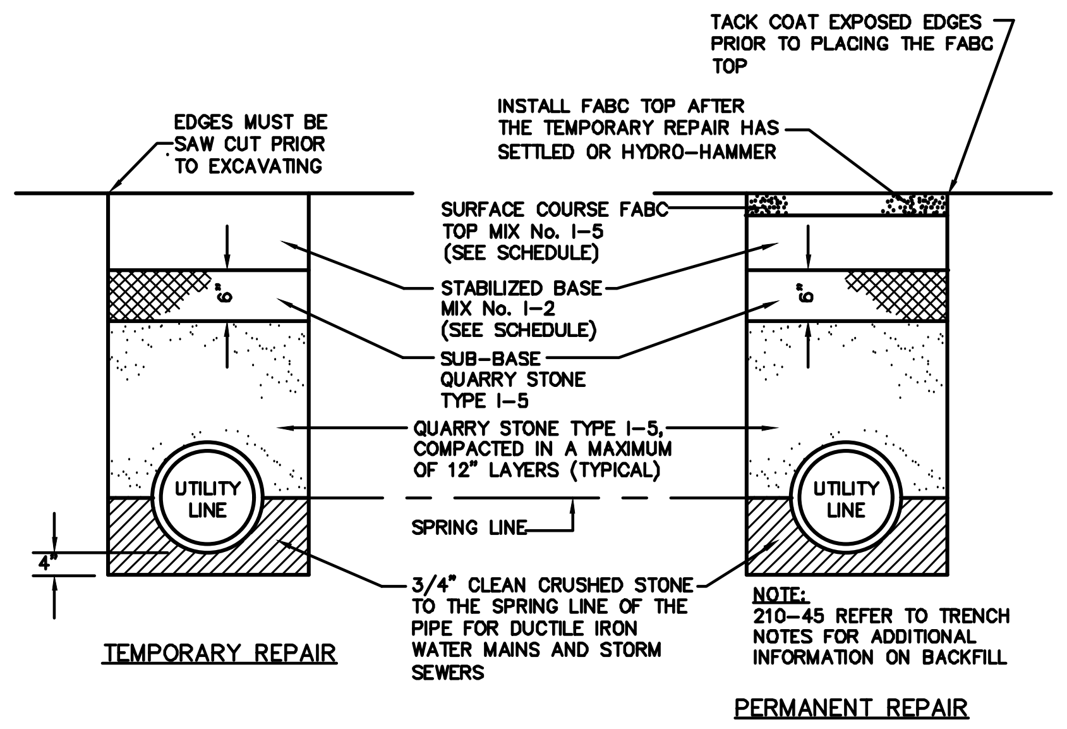
TACK COAT EXPOSED EDGES PRIOR TO PLACING THE FABC TOP
INSTALL FABC TOP AFTER THE TEMPORARY REPAIR HAS SETTLED OR HYDRO-HAMMER
EDGES MUST BE SAW CUT PRIOR TO EXCAVATING
SURFACE COURSE FABC TOP MIX No. I-5 (SEE SCHEDULE)
STABILIZED BASE MIX No. I-2 (SEE SCHEDULE)
SUB-BASE QUARRY STONE TYPE I-5
QUARRY STONE TYPE I-5, COMPACTED IN A MAXIMUM OF 12" LAYERS (TYPICAL)
6"
UTILITY LINE
SPRING LINE
4"
3/4" CLEAN CRUSHED STONE TO THE SPRING LINE OF THE PIPE FOR DUCTILE IRON WATER MAINS AND STORM SEWERS
TEMPORARY REPAIR
PERMANENT REPAIR

NOTE:
210-45 REFER TO TRENCH NOTES FOR ADDITIONAL INFORMATION ON BACKFILL

SCHEDULE

ROAD CLASS	USUAL PAV'T. WIDTH	R.O.W. WIDTH	STABILIZED BASE	FABC TOP
LOCAL RESIDENTIAL	30 FT.	50 FT.	4"	1 1/2"
LOCAL NON-RESIDENTIAL	40 FT.	60 FT.	6"	1 1/2"
COLLECTOR-RESIDENTIAL	36 FT.	60 FT.	6"	2"
COLLECTOR NON-RESIDENTIAL	42 FT.	66 FT.	7"	2"
MAJOR COLLECTOR	48 FT.	72 FT.	7"	2"
ARTERIAL	50 FT.	80-100 FT.	7"	2"

RESTORATION OF STREET OPENINGS

N.T.S.

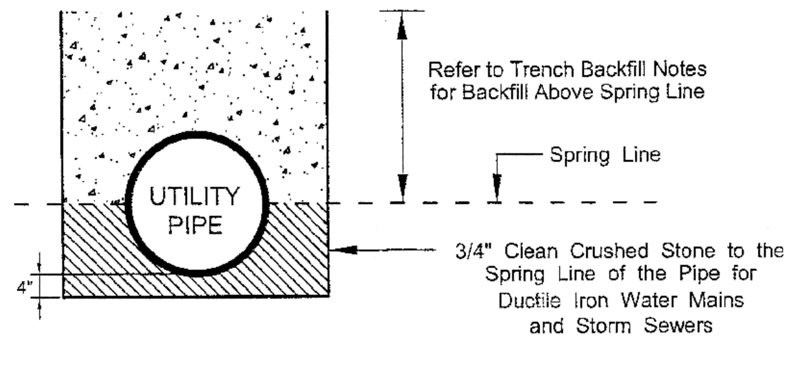
Refer to Trench Backfill Notes for Backfill Above Spring Line
Spring Line
UTILITY PIPE
4"
3/4" Clean Crushed Stone to the Spring Line of the Pipe for Ductile Iron Water Mains and Storm Sewers

UTILITY PIPE BEDDING DETAIL

N.T.S.

GENERAL INLET NOTES

1. INLETS MAY BE CONSTRUCTED OF BRICK, CONCRETE, CONCRETE BLOCK OR PRECAST CONCRETE. WALLS SHALL BE 8 INCHES THICK IF BRICK AND 6 INCHES THICK IF CONCRETE, CONCRETE BLOCK OR PRECAST CONCRETE. INLET FOUNDATIONS AND INVERTS SHALL BE CLASS B CONCRETE.
2. CORBELLING OF INLET WALLS WILL BE PERMITTED AT THE RATE OF 1/2 INCH PER 8 INCHES OF HEIGHT; MAXIMUM CORBEL 6 INCHES PER WALL.
3. EXCEPT FOR INLETS TYPE A AND C, FOUNDATIONS AND INVERTS SHALL BE CONSTRUCTED IN TWO STAGES, AND THE BOTTOM OF THE FOOTINGS SHALL BE 8 INCHES BELOW THE OUTER WALL OF THE LOWEST PIPE IN THE INLET.
4. WHEN THE DEPTH OF AN INLET THAT IS NOT PRECAST EXCEEDS 10 FEET AS MEASURED FROM TOP OF GRATE TO INVERT, WALLS BELOW A DEPTH OF 8 FEET SHALL BE 12 INCHES THICK AND THE DEPTH OF FOUNDATION INCREASED TO 12 INCHES. WHEN ROCK IS ENCOUNTERED, THE DEPTH OF THE FOUNDATION SHALL NOT BE INCREASED.
5. INLET FOUNDATIONS WHICH ARE PRECAST SHALL BE PLACED ON A 6 INCH THICK BED OF COMPACTED COARSE AGGREGATE SIZE NO. 57. THE COARSE AGGREGATE SHALL EXTEND 6 INCHES BEYOND THE HORIZONTAL LIMITS OF THE INLET FOUNDATION.
6. CASTINGS FOR PRECAST INLETS SHALL BE ADJUSTED TO GRADE WITH COURSES OF BRICK, AS REQUIRED, 12 INCHES MAXIMUM.
7. WHEN THE DEPTH OF A PRECAST INLET EXCEEDS 10 FEET AS MEASURED FROM TOP OF GRATE TO INVERT, THE FOUNDATION SHALL BE INCREASED TO 12 INCHES. WHEN ROCK IS ENCOUNTERED, THE DEPTH OF THE FOUNDATION SHALL NOT BE INCREASED.
8. MINIMUM WALL REINFORCEMENT FOR PRECAST INLETS TYPES A, B, C, E, D-1, D-2 AND B MODIFIED:

DEPTH BELOW TOP OF GRATE	HORIZONTAL REINF.	VERTICAL REINF.	WALL THK.
0' TO 10'-0"	#13 @ 10" C.C.	#13 @ 18" C.C.	6"
10'-1" TO 15'-0"	#13 @ 8" C.C.	#13 @ 18" C.C.	6"
15'-1" TO 20'-0"	#13 @ 6" C.C.	#13 @ 18" C.C.	6"

REINFORCING SHOWN FOR PRECAST INLETS IS THE MINIMUM REQUIRED. ADDITIONAL REINFORCING FOR HANDLING IS THE RESPONSIBILITY OF THE CONTRACTOR.

ALTERNATE REINFORCEMENT

DEPTH BELOW TOP OF GRATE	
0' TO 10'-0"	WWF 3 x 6 W6 WIRES SPACED AT 3" TO RUN HORIZONTAL IN ALL CASES.
10'-1" TO 15'-0"	WWF 3 x 6 W6 ADD #10 BAR @ 18" HORIZONTAL.
15'1" TO 20'0"	WWF 3 x 6 W6 ADD #3 BAR @ 9" HORIZONTAL OR ADD #4 BAR AT 15" HORIZONTAL.

9. C.D. 15 MUST ACCOMPANY THIS DETAIL.
ALL 'B' INLETS SHALL HAVE N-ECO CURB PIECE

FRANKLIN TOWNSHIP ENGINEERING DEPARTMENT
COMMERCIAL AS-BUILT (RECORD) PLAN REQUIREMENTS

1. AS-BUILT PLAN TO BE BASED UPON APPROVED SITE PLAN. TWO ORIGINAL SIGNED AND SEALED PAPER COPIES SHALL BE SUBMITTED.
2. SHOW BOTH PROPOSED LOCATIONS AND ELEVATIONS (CROSS OUT) AND ACTUAL LOCATION AND ELEVATIONS.
3. TOP AND BOTTOM OF CURB GRADES.
4. TOP AND BOTTOM OF WALL GRADES.
5. STORM SEWER GRATE, RIM AND INVERT ELEVATIONS. SHOW AS-BUILT PIPE SIZE MATERIAL, LENGTH AND SLOPE IN BOTH PLAN VIEW AND PROFILE (IF INCLUDED IN ORIGINAL SITE PLAN).
6. SANITARY SEWER RIM AND INVERT ELEVATIONS. SHOWN AS-BUILT PIPE SIZE, MATERIAL LENGTH AND SLOPE IN BOTH PLAN VIEW AND PROFILE (IF INCLUDED IN ORIGINAL SITE PLAN).
7. SHOWN CENTERLINE OF PAVEMENT GRADES ALONG ROADWAY AT 50' STATIONS, CENTERLINE INTERSECTIONS AND AT ALL HIGH AND LOW POINTS
8. SHOW SPOT ELEVATIONS TO DEMONSTRATE DRAINAGE IN PARKING AREAS.
9. SHOW SPOT ELEVATIONS TO DELINEATE DRAINAGE SWALES.
10. PROVIDE SUFFICIENT GRADE INFORMATION TO DETERMINE DETENTION BASIN CAPACITY AND PROVIDE INFORMATION ON OUTLET CONTROL STRUCTURE.
11. SHOW LOCATION OF HYDRANTS, FIRE DEPARTMENT CONNECTIONS AND WATER VALVES IN PLAN VIEW (STATION & OFFSETS TIRES NOT NECESSARY).
12. SHOW SANITARY SEWER CLEAN-OUTS IN PLAN VIEW (STATION & OFFSETS TIES NOT NECESSARY).
13. BUILDING FOOTPRINT LOCATIONS WITH OFFSETS TO NEAREST PROPERTY LINES. AS-BUILT ELEVATIONS AT BUILDING CORNERS.
14. SHOW PARKING LOT STRIPING AND SPECIFY HANDICAP SPACES.
15. LOCATION AND IDENTIFY ALL NEW SIGNAGE.
16. LOCATION OF ALL IMPROVEMENTS PROPOSED ON SITE PLAN (SIDEWALK, CURB, EDGE OF PAVEMENT, WALLS, FENCES, GUIDE RAILS, WATERCOURSES, DUMPSTER AREAS, LIGHT POLES, TREES, ETC.).
17. CAD-GENERATED DATA FILES, PREPARED BY A NEW JERSEY LICENSED LAND SURVEYOR DIRECTLY TRANSLATABLE INTO AN IDENTICAL IMAGE OF THE AS-BUILT PLAN (REQUIREMENTS PER SECTION 112-329). ELECTRONIC FILES (DWG OR DXF) MAY BE SENT TO THE FOLLOWING E-MAIL ADDRESS: ENGINEERING.REQUESTS@TWP.FRANKLIN.NJ.US

FRANKLIN TOWNSHIP ENGINEERING DEPARTMENT
STANDARD NOTES APPLICABLE TO ALL PROJECTS

ALL MATERIALS, WORKMANSHIP AND CONSTRUCTION FOR SITE IMPROVEMENTS SHOWN HERON SHALL BE IN ACCORDANCE WITH THE FOLLOWING, AS APPLICABLE:

A. NEW JERSEY DEPARTMENT OF TRANSPORTATION "STANDARD SPECIFICATIONS FOR ROAD AND BRIDGE CONSTRUCTION".

B. CURRENT PREVAILING MUNICIPAL AND/OR COUNTY SPECIFICATIONS, STANDARDS AND REQUIREMENTS.

C. CURRENT PREVAILING UTILITY COMPANY/AUTHORITY SPECIFICATIONS, STANDARDS AND REQUIREMENTS.

D. STATE OF NEW JERSEY B.O.C.A. CODE AND BARRIER-FREE DESIGN REGULATIONS AS CURRENTLY AMENDED.

E. CURRENT ANSI/AWWA STANDARDS, SPECIFICATIONS AND REQUIREMENTS FOR THE WATER SUPPLY SYSTEM.

F. NFiPA 24-92 FOR FIRE SPRINKLER LINES THAT APPLY FOR INSTALLATION AND TESTING.

"AS-BUILT PLAN OF THE ENTIRE SITE, PREPARED BY A NEW JERSEY LAND SURVEYOR IN ACCORDANCE WITH TOWNSHIP REQUIREMENTS, ARE TO BE PROVIDED TO THE TOWNSHIP PRIOR TO RELEASE OF PERFORMANCE BOND.

NO SOIL CAN BE IMPORTED TO OR REMOVED FROM THE SITE UNTIL A SOIL IMPORTATION OR EXPORTATION PERMIT IS OBTAINED FROM THE ENGINEERING DEPARTMENT.

THE SUBGRADE OF ALL STREETS AND PARKING AREAS MUST BE PROOF-ROLLED USING A TRI-AXLE TANDEM DUMP TRUCK WITH A MINIMUM CERTIFIED WEIGHT OF 70,000 LBS FULLY LOADED. THE PROOF-ROLL IS TO BE CONDUCTED UNDER THE DIRECT SUPERVISION OF THE TOWNSHIP ENGINEER OR HIS REPRESENTATIVE.

CONSTRUCTION CASTINGS:

NOTE THAT ALL CASTINGS SHALL BE OF UNITED STATES MANUFACTURE AND NJDOT APPROVED. IF OTHER THAN CAMPBELL, NEENAH, BRIDGESTATE, EMPORIA, QUIRIN OR EAST JORDAN IRONWORKS CASTINGS ARE PLANNED TO BE USED, COMPLETE DATA MUST BE SUBMITTED INCLUDING, BUT NOT NECESSARILY LIMITED TO, AN AFFIDAVIT CERTIFYING THAT THE CASTINGS WERE MADE IN THE U.S.; LOAD CAPACITY BASED ON THE STANDARD HIGHWAY LOADING; WEIGHTS AND CONFIGURATIONS OF THE CASTINGS AND METALLURGICAL ANALYSIS. ALL GRATES ARE TO BE "BICYCLE SAFE".

210-45 TRENCHES

ALL TRENCHES OR DITCHES WHICH CROSS AN EXISTING STREET AND WHICH ARE DUG FOR SEWERS, WATER MAINS, GAS MAINS OR OTHER UTILITIES, INCLUDING THE HOUSE CONNECTIONS FOR THOSE UTILITIES, SHALL BE FILLED WITH QUARRY PROCESS STONE. THE STONE SHALL BE PLACED IN LAYERS NOT EXCEEDING TWELVE (12) INCHES IN DEPTH AND SHALL BE SPRINKLED WITH WATER AND MECHANICALLY COMPACTED. ALL SOFT SPOTS AND DEPRESSIONS IN A SURFACE WHICH HAS BEEN GRADED WILL BE REMOVED AND FILLED WITH STONE OF A SIZE TO BE DETERMINED BY THE TOWNSHIP ENGINEER. ALL TRENCHES WHICH ARE DUG IN A FUTURE STREET OR EXISTING R.O.W., ON WHICH NO SUBBASE OR PAVEMENT HAS BEEN CONSTRUCTED SHALL BE BACKFILLED AS INDICATED ABOVE OR MAY BE BACKFILLED WITH SUITABLE ON-SITE EXCAVATED MATERIALS OR IMPORTED FILL.

PRIOR TO USING ANY ON-SITE AND/OR IMPORTED SOIL MATERIALS THE CONTRACTOR OR ANY INDIVIDUAL OR FIRM SHALL EMPLOY A RECOGNIZED SOILS LABORATORY TO SECURE SOIL SAMPLES; PERFORM THE NECESSARY LABORATORY ANALYSIS AND ESTABLISH THE COMPACTION AND OTHER CRITERIA NECESSARY FOR THE PROPER PLACEMENT OF THE BACKFILL. A REPORT OF THE LABORATORY FINDINGS, INCLUDING THE COMPACTION SPECIFICATIONS, SHALL BE SUBMITTED TO THE TOWNSHIP ENGINEER FOR REVIEW AND APPROVAL PRIOR TO COMMENCING ANY BACKFILL OPERATIONS USING ON-SITE SOIL AND/OR IMPORTED SOIL MATERIALS.

DURING THE BACKFILLING OPERATIONS, THE CONTRACTOR OR ANY INDIVIDUAL OR FIRM ENGAGED IN A BACKFILLING OPERATION SHALL EMPLOY A PROFESSIONAL ENGINEER, LICENSED IN THE STATE OF NEW JERSEY, OR HIS REPRESENTATIVE, WHO IS REGULARLY ENGAGED IN THE PRACTICE OF GEOTECHNICAL ENGINEERING AND WHO IS TRAINED IN SOIL MECHANICS, TO OBSERVE THE PLACEMENT OF THE BACKFILL. THE SOILS ENGINEER SHALL FILE DAILY REPORTS, WITH THE TOWNSHIP ENGINEER INDICATION THE RESULTS OF THE COMPACTION AND UPON THE CONCLUSION OF THE PROJECT FILE A FINAL CERTIFICATION INDICATING THAT THE BACKFILL MATERIAL HAS BEEN PLACED AND COMPACTED IN ACCORDANCE WITH THE RECOMMENDATIONS CONTAINED IN THE APPROVED LABORATORY REPORT.

BACKFILL IN TRENCHES IN FIELD OR LAWN AREAS SHALL COMPLY WITH THE REQUIREMENTS FOR ON-SITE OR IMPORTED SOIL MATERIALS, AS INDICATED ABOVE.

PIPING

ALL STORM SEWER, SANITARY SEWER, AND WATER MAIN PIPING SHALL MAINTAIN A MINIMUM OF TEN (10) FEET FROM BUILDING FOUNDATIONS OR OTHER STRUCTURES.

DRIVEWAYS

DRIVEWAY CONNECTIONS TO STREET RIGHT-OF-WAYS SHALL MAINTAIN A PERPENDICULAR ALIGNMENT AND COMPLY WITH ARTICLE XI – OFF STREET PARKING AND LOADING.

COLD WEATHER CONCRETE RESTRICTIONS

DURING THE COLD WEATHER MONTHS FRANKLIN TOWNSHIP ENGINEERING WILL ENFORCE THE FOLLOWING REGULATIONS TAKEN FROM ACI, PCA, AND N. J. STATE STANDARDS:

1. NO CONCRETE SHALL BE PLACED UNLESS THE AMBIENT TEMPERATURE IS 40 DEGREES F, ON A RISING THERMOMETER OR IF THE INTERIOR OF THE FORMS AND ANY SURFACE ADJACENT TO THE NEW CONCRETE ARE PREHEATED TO THAT TEMPERATURE OR HIGHER.
2. HEATING OF FORMS SHALL BE BY FORCED AIR OR RADIATION, NO OPEN FLAME HEATING WILL BE ALLOWED.
3. THE MINIMUM TEMPERATURE OF FRESH CONCRETE AS PLACED AND MAINTAINED SHALL BE 55° F.
4. THE DURATION OF RECOMMENDED CONCRETE TEMPERATURE SHALL BE SIX (6) DAYS FOR CONVENTIONAL CONCRETE AND THREE (3) DAYS FOR HIGH-EARLY-STRENGTH CONCRETE.
5. CALCIUM CHLORIDE IS %%UNOT%%U ALLOWED AS A CONCRETE ACCELERATOR. ACCEL-GUARD 80 IS ACCEPTABLE.
6. ADEQUATE ACCEPTABLE INSULATING MATERIALS SHALL BE PROVIDED TO MAINTAIN THE RECOMMENDED TEMPERATURE. BLANKETS, OR DRY SALT HAY COVERED WITH TARPAULINS OR POLYETHYLENE FILM ARE ACCEPTABLE.

COLD WEATHER PAVING RESTRICTIONS

DURING THE COLD WEATHER MONTHS FRANKLIN TOWNSHIP ENGINEERING WILL ENFORCE THE FOLLOWING REGULATIONS TAKEN FROM N.J. STATE STANDARDS.

1. THE SURFACE UPON WHICH THE BITUMINOUS CONCRETE IS TO BE PLACED SHALL BE CLEAN OF ALL FOREIGN AND LOOSE MATERIAL, DRY AND FREE FROM ICE WHEN THE PAVING OPERATIONS ARE ABOUT TO START AND SHALL BE MAINTAINED IN THAT CONDITION.
2. BITUMINOUS CONCRETE MIXTURES SHALL BE PLACED WHEN THE COMBINATIONS OF LAYDOWN AND BASE SURFACE TEMPERATURES ARE WITHIN THE LIMITS SHOWN IN THE TABLE BELOW, WHEN THE WEATHER IS NOT RAINY, AND WHEN THE ROADBED IS IN SATISFACTORY CONDITION.
3. TEMPERATURE TESTING EQUIPMENT SHALL BE SUPPLIED BY THE CONTRACTOR. LAYDOWN TEMPERATURE WILL BE MEASURED IN THE RECEIVING HOPPER OF THE PAVER. MINIMUM LAYDOWN TEMPERATURE (DEGREES F) PAVEMENT THICKNESS (INCHES)

BASE TEMP	1/2	3/4	1	1-1/2		3 AND GREATER
20-30	(1)	(1)	(1)	310	300	285
31-40	(1)	(1)	(1)	305	295	280
41-50	(1)	(1)	310	300	285	275
51-60	(1)	310	300	295	280	270
61-70	310	300	290	285	275	265
71-80	300	290	285	280	270	265
81-90	290	280	275	270	265	260
91 AND OVER	280	275	270	265	260	255

NOTE 1 – NO PAVING PERMITTED

revisions

no.	date	description
1	10/12/21	PER SCD & TWP COMMENTS/NJDEP PERMIT PLAN
2	01/17/22	PER DEP, DRCC & COUNTY COMMENTS

LEGEND

⋈	GAS VALVE
Ⓖ	GAS METER
⋈	WATER VALVE
☼	HYDRANT
Ⓦ	WATER METER
CS ⊕	CURB STOP
FDC ○	FIRE DEPT. CONNECTION
Ⓓ	DRAINAGE MH
▬	CURB INLET
▤	LAWN INLET
Ⓢ	SANITARY MH
C.O. ○	CLEANOUT
○	BOLLARD
○ˢ	SIGN
☼	LIGHT
Ⓜ	MAIL BOX
⊸	GUY WIRE
⊖	UTILITY POLE
Ⓔ	ELECTRIC MH
⊙	CONIFEROUS TREE
⊙	DECIDUOUS TREE
— X —	FENCE
—o——o—	RAILING
▭	WALL
◉	GATE POST
— W —	WATER LINE
— G —	GAS LINE
— E —	ELECTRIC LINE
— S —	SANITARY LINE
— OH —	OVERHEAD WIRES

Engineers
Landscape Architects
Land Surveyors
Planners

575 Route 28, Suite 110
Raritan, N.J. 08869
908-722-1500
Fax 908-722-7035
www.reynoldsgrp.com

The Reynolds Group Inc.

State of New Jersey
Certificate of Authorization
Number 24GA27969200
21MH00004300

F. Mitchel Ardman, P.E., P.P.
Jeffrey D. Reynolds, P.L.A.

F Mitchel Ardman
F. MITCHEL ARDMAN
N.J. PROFESSIONAL ENGINEER LIC. NO. 34317

project

ACCESS SELF STORAGE

BLOCK 502.01, LOTS 45.01 & 46.01
297 & 305 DAVIDSON AVENUE
TOWNSHIP OF FRANKLIN
SOMERSET COUNTY, NEW JERSEY

drawing title

CONSTRUCTION DETAILS

job number 21-010	drawing number 13
scale AS SHOWN	
checked by FMA	
drawn by GH	
date 08/31/2021	sheet 13 of 15

J:\ENGINEERING PROJECTS\2021\21-010 - 297 DAVIDSON AVE_CAD\DESIGN\21-010 DETAILS (R2).DWG-(1/25/22)

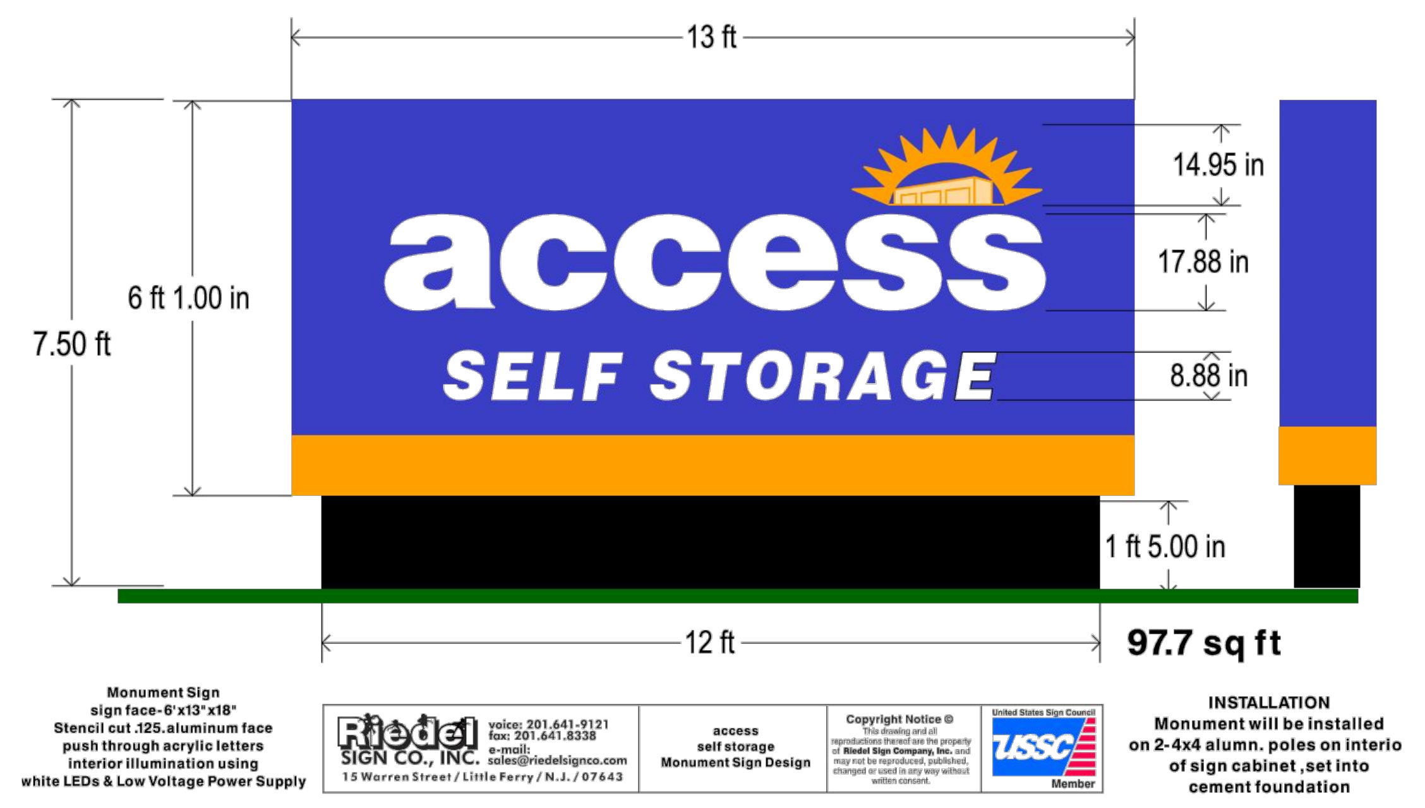
13 ft
14.95 in
17.88 in
8.88 in
6 ft 1.00 in
7.50 ft
access
SELF STORAGE
1 ft 5.00 in
12 ft
97.7 sq ft
Monument Sign
sign face-6'x13"x18"
Stencil cut .125.aluminum face
push through acrylic letters
interior illumination using
white LEDs & Low Voltage Power Supply
Riedel SIGN CO., INC.
voice: 201.641.9121
fax: 201.641.8338
e-mail: sales@riedelsignco.com
15 Warren Street / Little Ferry / N.J. / 07643
access
self storage
Monument Sign Design
Copyright Notice ©
This drawing and all reproductions thereof are the property of Riedel Sign Company, Inc. and may not be reproduced, published, changed or used in any way without written consent.
United States Sign Council
USSC
Member
INSTALLATION
Monument will be installed
on 2-4x4 alumn. poles on interio
of sign cabinet ,set into
cement foundation

FREESTANDING MONUMENT SIGN

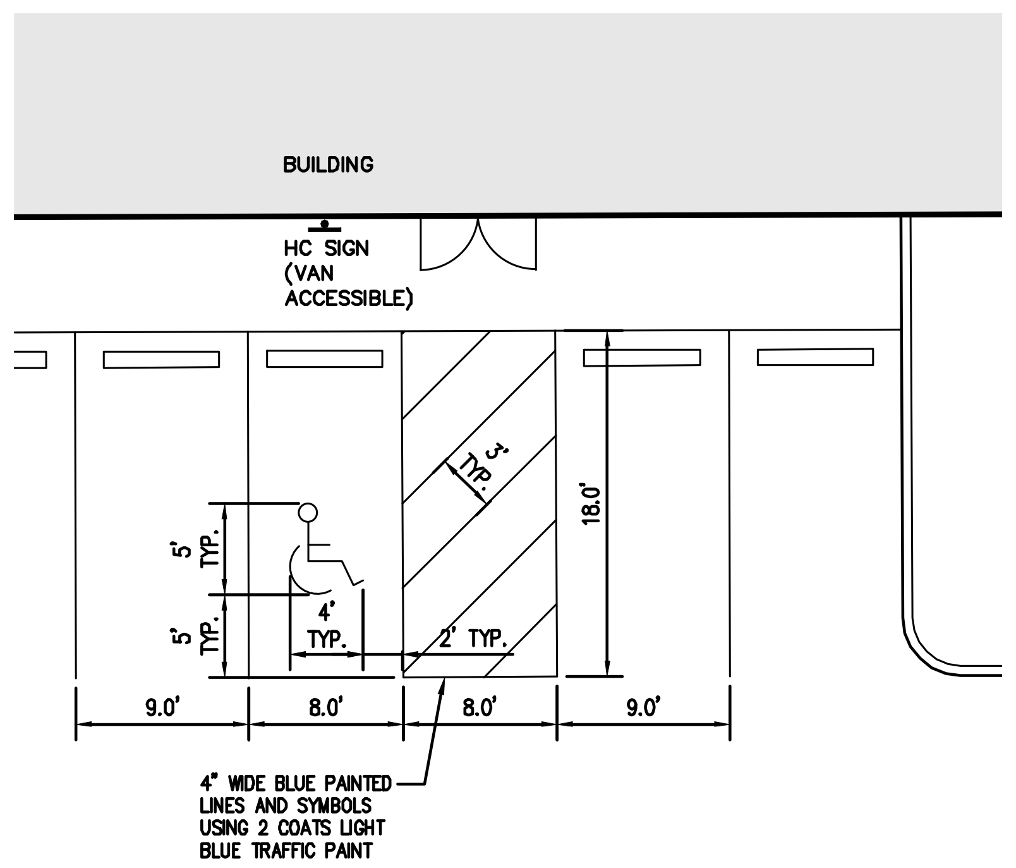
BUILDING
HC SIGN
(VAN
ACCESSIBLE)
3'
TYP.
18.0'
5'
TYP.
5'
TYP.
4'
TYP.
2' TYP.
9.0'
8.0'
8.0'
9.0'
4" WIDE BLUE PAINTED
LINES AND SYMBOLS
USING 2 COATS LIGHT
BLUE TRAFFIC PAINT

HANDICAPPED PARKING SPACE DETAIL

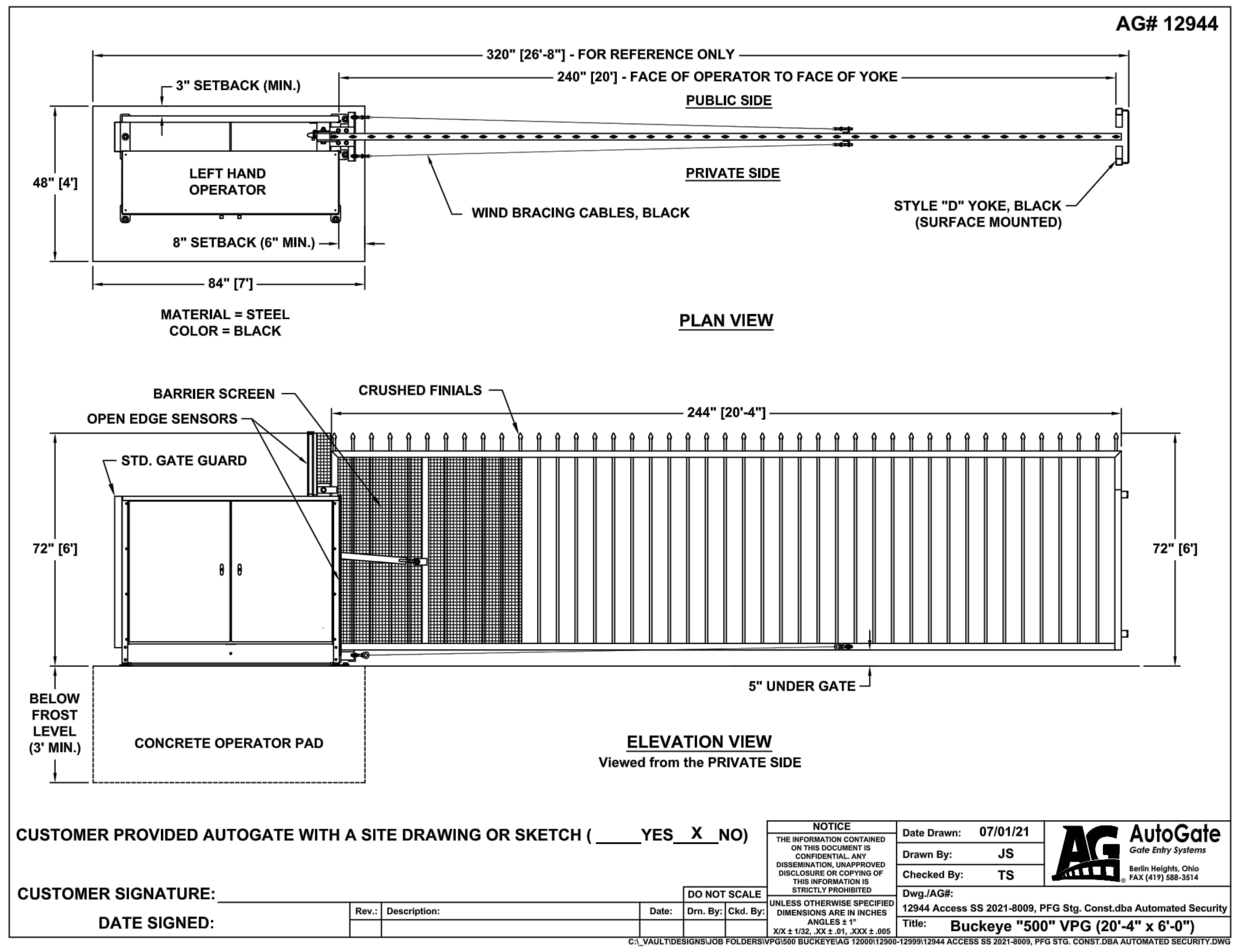
AG# 12944
320" [26'-8"] - FOR REFERENCE ONLY
240" [20'] - FACE OF OPERATOR TO FACE OF YOKE
3" SETBACK (MIN.)
PUBLIC SIDE
48" [4']
LEFT HAND
OPERATOR
PRIVATE SIDE
WIND BRACING CABLES, BLACK
STYLE "D" YOKE, BLACK
(SURFACE MOUNTED)
8" SETBACK (6" MIN.)
84" [7']
MATERIAL = STEEL
COLOR = BLACK
PLAN VIEW
BARRIER SCREEN
CRUSHED FINIALS
OPEN EDGE SENSORS
244" [20'-4"]
STD. GATE GUARD
72" [6']
72" [6']
5" UNDER GATE
BELOW
FROST
LEVEL
(3' MIN.)
CONCRETE OPERATOR PAD
ELEVATION VIEW
Viewed from the PRIVATE SIDE
CUSTOMER PROVIDED AUTOGATE WITH A SITE DRAWING OR SKETCH (____YES__X__NO)
CUSTOMER SIGNATURE:
DATE SIGNED:
Rev.:
Description:
Date:
DO NOT SCALE
Drn. By:
Ckd. By:
NOTICE
THE INFORMATION CONTAINED ON THIS DOCUMENT IS CONFIDENTIAL. ANY DISSEMINATION, UNAPPROVED DISCLOSURE OR COPYING OF THIS INFORMATION IS STRICTLY PROHIBITED
UNLESS OTHERWISE SPECIFIED DIMENSIONS ARE IN INCHES ANGLES ± 1° X/X ± 1/32, .XX ± .01, .XXX ± .005
Date Drawn: 07/01/21
Drawn By: JS
Checked By: TS
AG AutoGate
Gate Entry Systems
Berlin Heights, Ohio
FAX (419) 588-3514
Dwg./AG#:
12944 Access SS 2021-8009, PFG Stg. Const.dba Automated Security
Title: Buckeye "500" VPG (20'-4" x 6'-0")
C:_VAULT\DESIGNS\JOB FOLDERS\VPG\500 BUCKEYE\AG 12000\12900-12999\12944 ACCESS SS 2021-8009, PFG STG. CONST.DBA AUTOMATED SECURITY.DWG

SLIDING GATE

N.T.S.

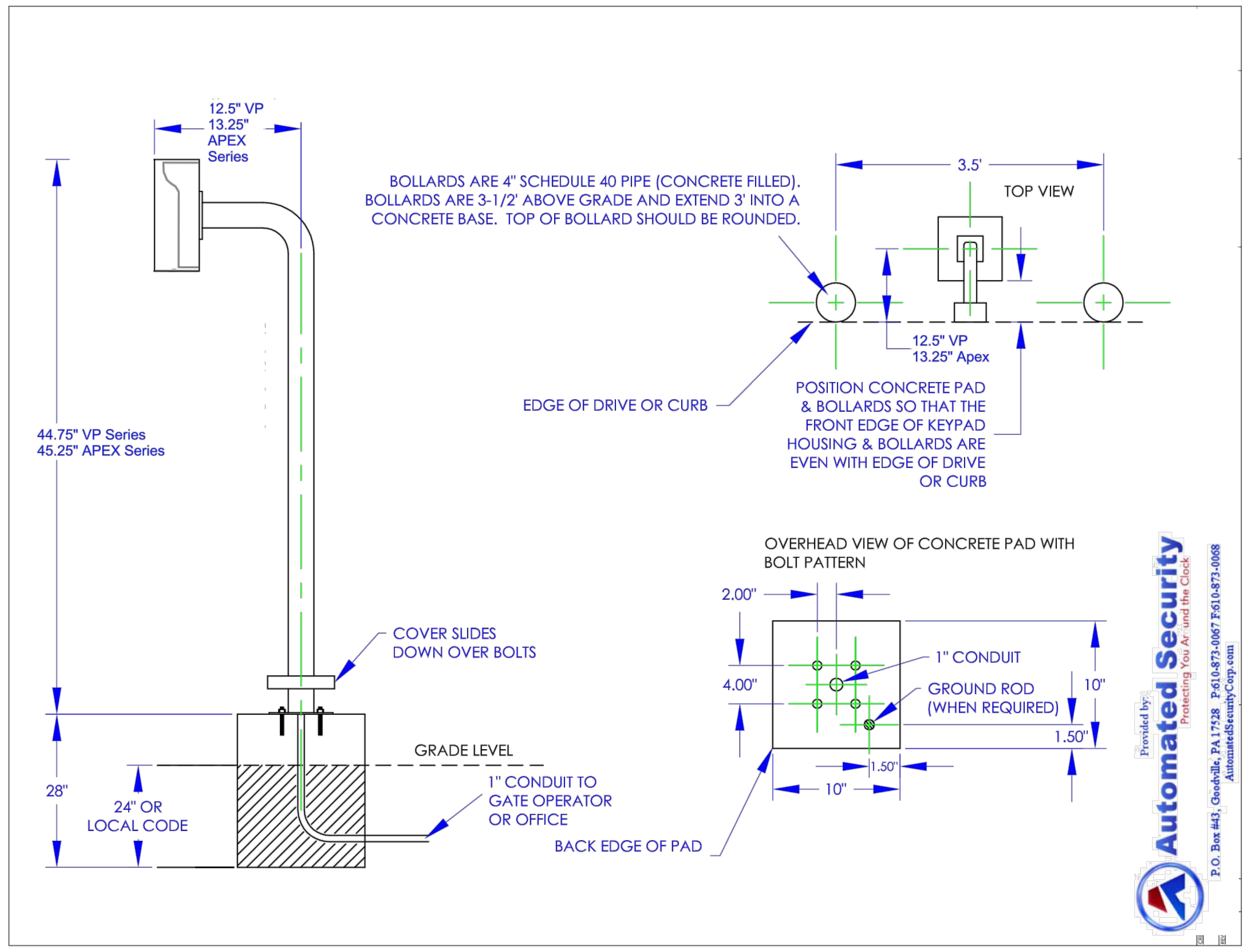
12.5" VP
13.25"
APEX
Series
44.75" VP Series
45.25" APEX Series
BOLLARDS ARE 4" SCHEDULE 40 PIPE (CONCRETE FILLED).
BOLLARDS ARE 3-1/2' ABOVE GRADE AND EXTEND 3' INTO A
CONCRETE BASE. TOP OF BOLLARD SHOULD BE ROUNDED.
3.5'
TOP VIEW
12.5" VP
13.25" Apex
EDGE OF DRIVE OR CURB
POSITION CONCRETE PAD
& BOLLARDS SO THAT THE
FRONT EDGE OF KEYPAD
HOUSING & BOLLARDS ARE
EVEN WITH EDGE OF DRIVE
OR CURB
OVERHEAD VIEW OF CONCRETE PAD WITH
BOLT PATTERN
2.00"
4.00"
1" CONDUIT
GROUND ROD
(WHEN REQUIRED)
10"
1.50"
1.50"
10"
COVER SLIDES
DOWN OVER BOLTS
GRADE LEVEL
28"
24" OR
LOCAL CODE
1" CONDUIT TO
GATE OPERATOR
OR OFFICE
BACK EDGE OF PAD
Provided by:
Automated Security
Protecting You Around the Clock
P.O. Box #43, Goodville, PA 17528 P:610-873-0067 F:610-873-0068
AutomatedSecurityCorp.com

GATE KEYPAD

N.T.S.

revisions		
no.	date	description
1	10/12/21	PER SCD & TWP COMMENTS/NJDEP PERMIT PLAN
2	01/17/22	PER DEP, DRCC & COUNTY COMMENTS

LEGEND

GAS VALVE
GAS METER
WATER VALVE
HYDRANT
WATER METER
CURB STOP
FIRE DEPT. CONNECTION
DRAINAGE MH
CURB INLET
LAWN INLET
SANITARY MH
CLEANOUT
BOLLARD
SIGN
LIGHT
MAIL BOX
GUY WIRE
UTILITY POLE
ELECTRIC MH
CONIFEROUS TREE
DECIDUOUS TREE
— X — FENCE
RAILING
WALL
GATE POST
— W — WATER LINE
— G — GAS LINE
— E — ELECTRIC LINE
— S — SANITARY LINE
— OH — OVERHEAD WIRES

Engineers
Landscape Architects
Land Surveyors
Planners

575 Route 28, Suite 110
Raritan, N.J. 08869
908–722–1500
Fax 908–722–7035
www.reynoldsgrp.com

The Reynolds Group Inc.

State of New Jersey
Certificate of Authorization
Number 24GA27969200
21MH00004300

F. Mitchel Ardman, P.E., P.P.
Jeffrey D. Reynolds, P.L.A.

F Mitchel Ardman
F. MITCHEL ARDMAN
N.J. PROFESSIONAL ENGINEER LIC. NO. 34317

project

ACCESS SELF STORAGE

BLOCK 502.01, LOTS 45.01 & 46.01
297 & 305 DAVIDSON AVENUE
TOWNSHIP OF FRANKLIN
SOMERSET COUNTY, NEW JERSEY

drawing title

CONSTRUCTION DETAILS

job number: 21–010
scale: AS SHOWN
checked by: FMA
drawn by: GH
date: 08/31/2021
drawing number: 14
sheet 14 of 15

J:\ENGINEERING PROJECTS\2021\21–010 – 297 DAVIDSON AVE_CAD\DESIGN\21–010 DETAILS (R2).DWG–(1/25/22)

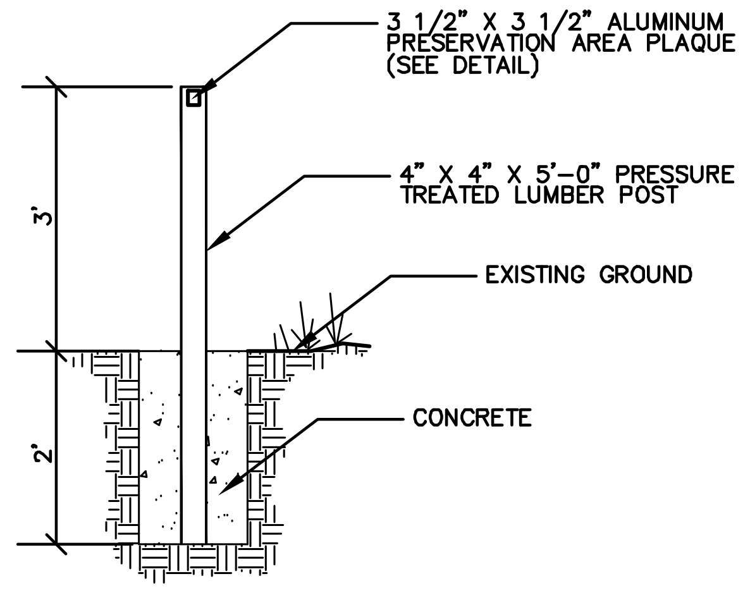
3 1/2" X 3 1/2" ALUMINUM PRESERVATION AREA PLAQUE (SEE DETAIL)
4" X 4" X 5'–0" PRESSURE TREATED LUMBER POST
EXISTING GROUND
CONCRETE
3'
2'

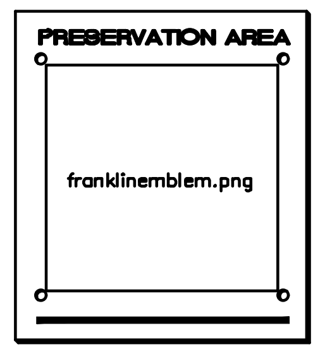
PRESERVATION AREA
franklinemblem.png

SURVEY MARKERS AND WOODEN POSTS WITH 3–1/2" X 3–1/2" ALUMINUM PRESERVATION AREA PLAQUES ATTACHED SHALL BE SET AT ALL BOUNDARY CORNERS OF PRESERVATION AREAS AND INTERSECTING PROPERTY LINES AND SUCH OTHER LOCATIONS AS SHALL BE DETERMINED BY THE PLANNING BOARD OR BOARD OF ADJUSTMENT IN ACCORDANCE WITH SECTION 112–147 OF THE FRANKLIN TOWNSHIP LAND DEVELOPMENT REGULATIONS.

NOTES:
1. POSTS SHALL BE LOCATED ONE (1) FOOT INSIDE THE PRESERVATION AREA WITH THE PLAQUE FACING THE PRESERVATION AREA BOUNDARY LINE.
2. PLAQUES SHALL CONFORM IN DESIGN AND COLOR TO SAMPLE PLAQUES AVAILABLE AT THE OFFICE OF THE FRANKLIN TOWNSHIP CLERK.

PRESERVATION AREA PLAQUES

N.T.S.

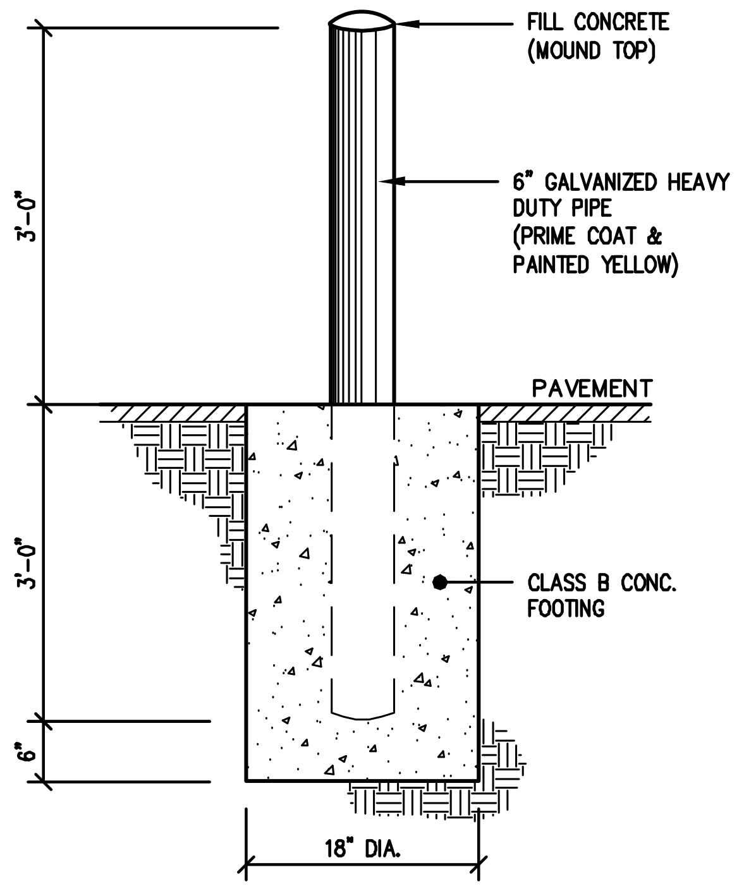
FILL CONCRETE (MOUND TOP)
6" GALVANIZED HEAVY DUTY PIPE (PRIME COAT & PAINTED YELLOW)
PAVEMENT
CLASS B CONC. FOOTING
3'–0"
3'–0"
6"
18" DIA.

PIPE BOLLARD

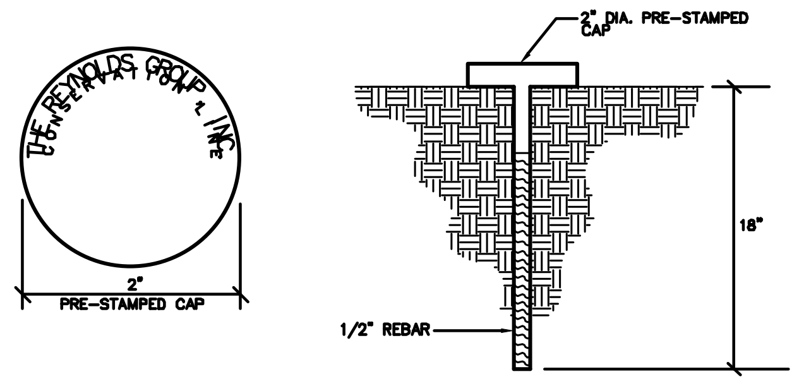
THE REYNOLDS GROUP, INC.
CONSERVATION
2"
PRE–STAMPED CAP
2" DIA. PRE–STAMPED CAP
18"
1/2" REBAR

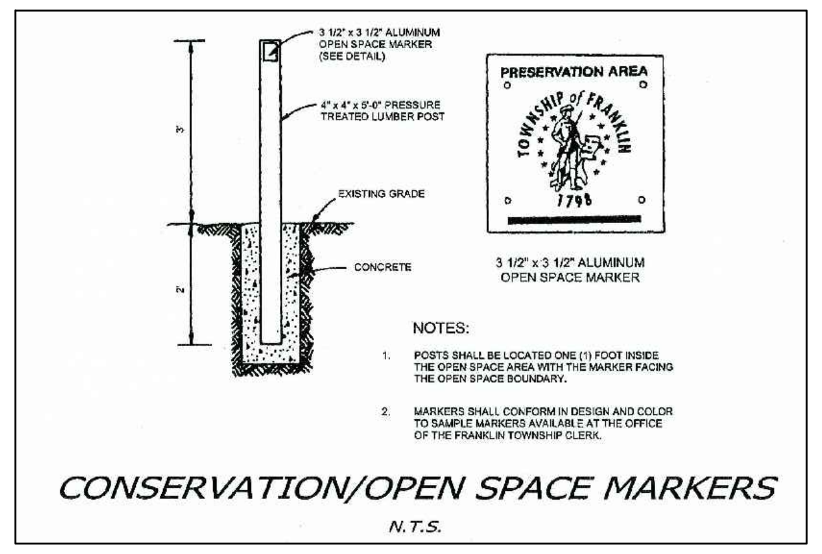
3 1/2" x 3 1/2" ALUMINUM OPEN SPACE MARKER (SEE DETAIL)
4" x 4" x 5'-0" PRESSURE TREATED LUMBER POST
EXISTING GRADE
CONCRETE
PRESERVATION AREA
TOWNSHIP of FRANKLIN
1798
3 1/2" x 3 1/2" ALUMINUM OPEN SPACE MARKER

NOTES:
1. POSTS SHALL BE LOCATED ONE (1) FOOT INSIDE THE OPEN SPACE AREA WITH THE MARKER FACING THE OPEN SPACE BOUNDARY.
2. MARKERS SHALL CONFORM IN DESIGN AND COLOR TO SAMPLE MARKERS AVAILABLE AT THE OFFICE OF THE FRANKLIN TOWNSHIP CLERK.

CONSERVATION/OPEN SPACE MARKERS

N.T.S.

CONSERVATION LINE MONUMENT DETAIL

N.T.S.

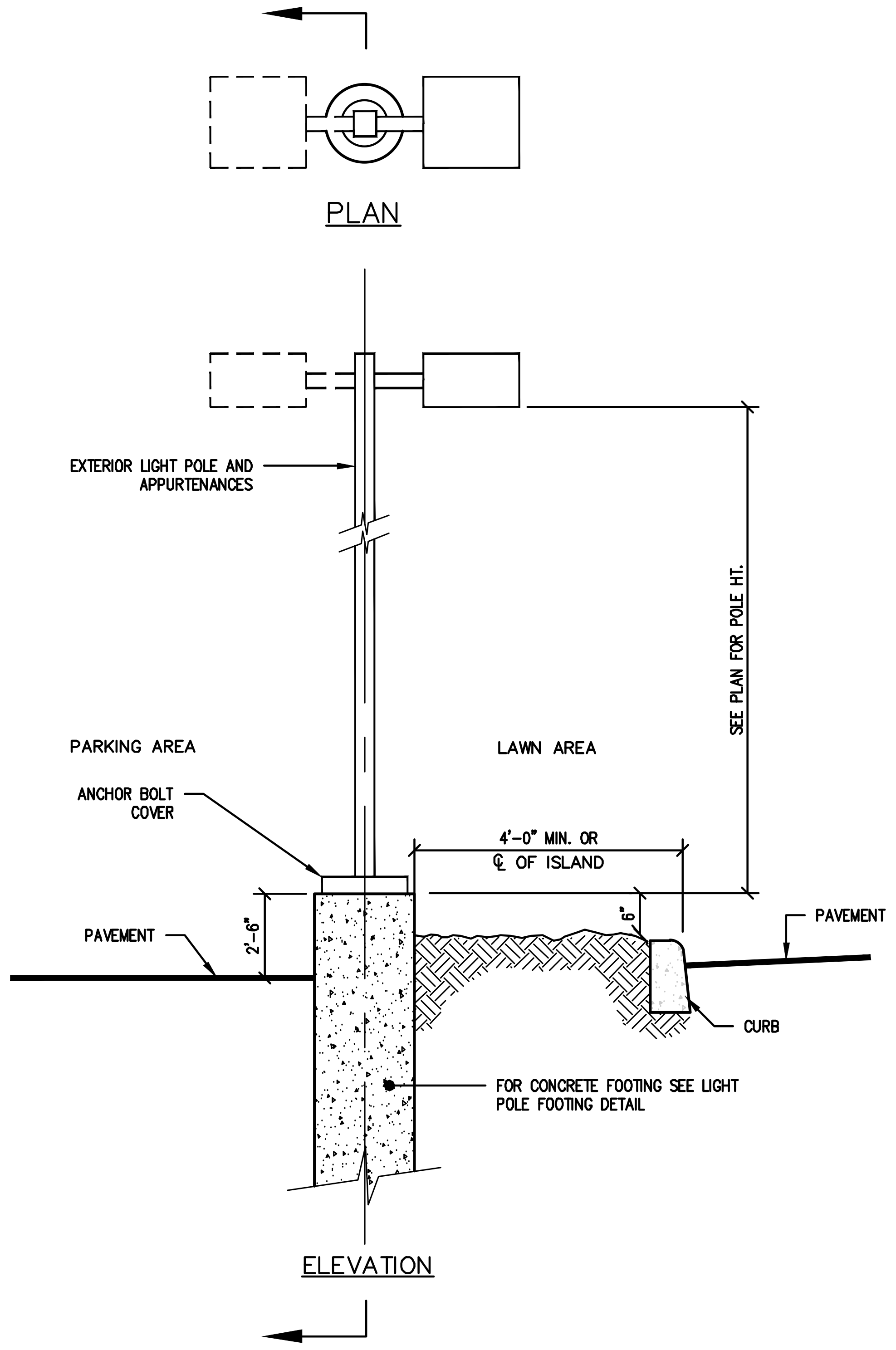
PLAN
EXTERIOR LIGHT POLE AND APPURTENANCES
SEE PLAN FOR POLE HT.
PARKING AREA
LAWN AREA
ANCHOR BOLT COVER
4'–0" MIN. OR ℄ OF ISLAND
PAVEMENT
2'–6"
6"
PAVEMENT
CURB
FOR CONCRETE FOOTING SEE LIGHT POLE FOOTING DETAIL
ELEVATION

LIGHT POLE MOUNTING

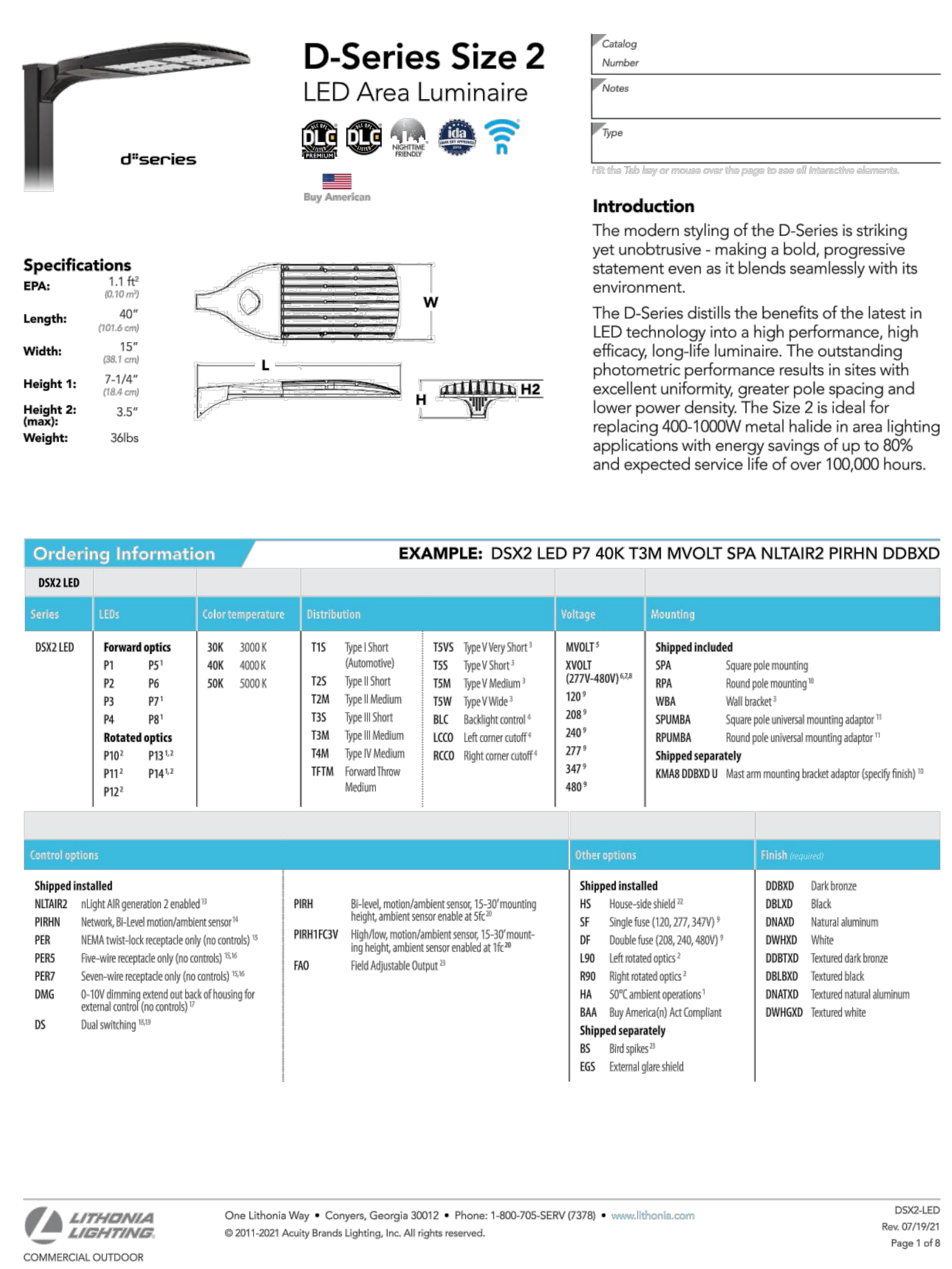
d"series
DLC PREMIUM
DLC
NIGHTTIME FRIENDLY
ida
Buy American
W
L
H
H2

D-Series Size 2

LED Area Luminaire

Catalog Number

Notes

Type

Hit the Tab key or mouse over the page to see all interactive elements.

Specifications

EPA:	1.1 ft² (0.10 m²)
Length:	40" (101.6 cm)
Width:	15" (38.1 cm)
Height 1:	7-1/4" (18.4 cm)
Height 2: (max):	3.5"
Weight:	36lbs

Introduction

The modern styling of the D-Series is striking yet unobtrusive - making a bold, progressive statement even as it blends seamlessly with its environment.

The D-Series distills the benefits of the latest in LED technology into a high performance, high efficacy, long-life luminaire. The outstanding photometric performance results in sites with excellent uniformity, greater pole spacing and lower power density. The Size 2 is ideal for replacing 400-1000W metal halide in area lighting applications with energy savings of up to 80% and expected service life of over 100,000 hours.

Ordering Information **EXAMPLE:** DSX2 LED P7 40K T3M MVOLT SPA NLTAIR2 PIRHN DDBXD

DSX2 LED					
Series	LEDs	Color temperature	Distribution	Voltage	Mounting
DSX2 LED	**Forward optics** P1 P5[1] P2 P6 P3 P7[1] P4 P8[1] **Rotated optics** P10[2] P13[1,2] P11[2] P14[1,2] P12[2]	30K 3000 K 40K 4000 K 50K 5000 K	T1S Type I Short (Automotive) T2S Type II Short T2M Type II Medium T3S Type III Short T3M Type III Medium T4M Type IV Medium TFTM Forward Throw Medium T5VS Type V Very Short[3] T5S Type V Short[3] T5M Type V Medium[3] T5W Type V Wide[3] BLC Backlight control[4] LCCO Left corner cutoff[4] RCCO Right corner cutoff[4]	MVOLT[5] XVOLT (277V-480V)[6,7,8] 120[9] 208[9] 240[9] 277[9] 347[9] 480[9]	**Shipped included** SPA Square pole mounting RPA Round pole mounting[10] WBA Wall bracket[3] SPUMBA Square pole universal mounting adaptor[11] RPUMBA Round pole universal mounting adaptor[11] **Shipped separately** KMA8 DDBXD U Mast arm mounting bracket adaptor (specify finish)[10]

Control options	Other options	Finish *(required)*
Shipped installed NLTAIR2 nLight AIR generation 2 enabled[13] PIRHN Network, Bi-Level motion/ambient sensor[14] PER NEMA twist-lock receptacle only (no controls)[15] PER5 Five-wire receptacle only (no controls)[15,16] PER7 Seven-wire receptacle only (no controls)[15,16] DMG 0-10V dimming extend out back of housing for external control (no controls)[17] DS Dual switching[18,19] PIRH Bi-level, motion/ambient sensor, 15-30' mounting height, ambient sensor enable at 5fc[20] PIRH1FC3V High/low, motion/ambient sensor, 15-30' mounting height, ambient sensor enabled at 1fc[20] FAO Field Adjustable Output[23]	**Shipped installed** HS House-side shield[22] SF Single fuse (120, 277, 347V)[9] DF Double fuse (208, 240, 480V)[9] L90 Left rotated optics[2] R90 Right rotated optics[2] HA 50°C ambient operations[1] BAA Buy America(n) Act Compliant **Shipped separately** BS Bird spikes[23] EGS External glare shield	DDBXD Dark bronze DBLXD Black DNAXD Natural aluminum DWHXD White DDBTXD Textured dark bronze DBLBXD Textured black DNATXD Textured natural aluminum DWHGXD Textured white

LITHONIA LIGHTING
COMMERCIAL OUTDOOR

One Lithonia Way • Conyers, Georgia 30012 • Phone: 1-800-705-SERV (7378) • www.lithonia.com
© 2011-2021 Acuity Brands Lighting, Inc. All rights reserved.

DSX2-LED
Rev. 07/19/21
Page 1 of 8

LIGHT DETAIL

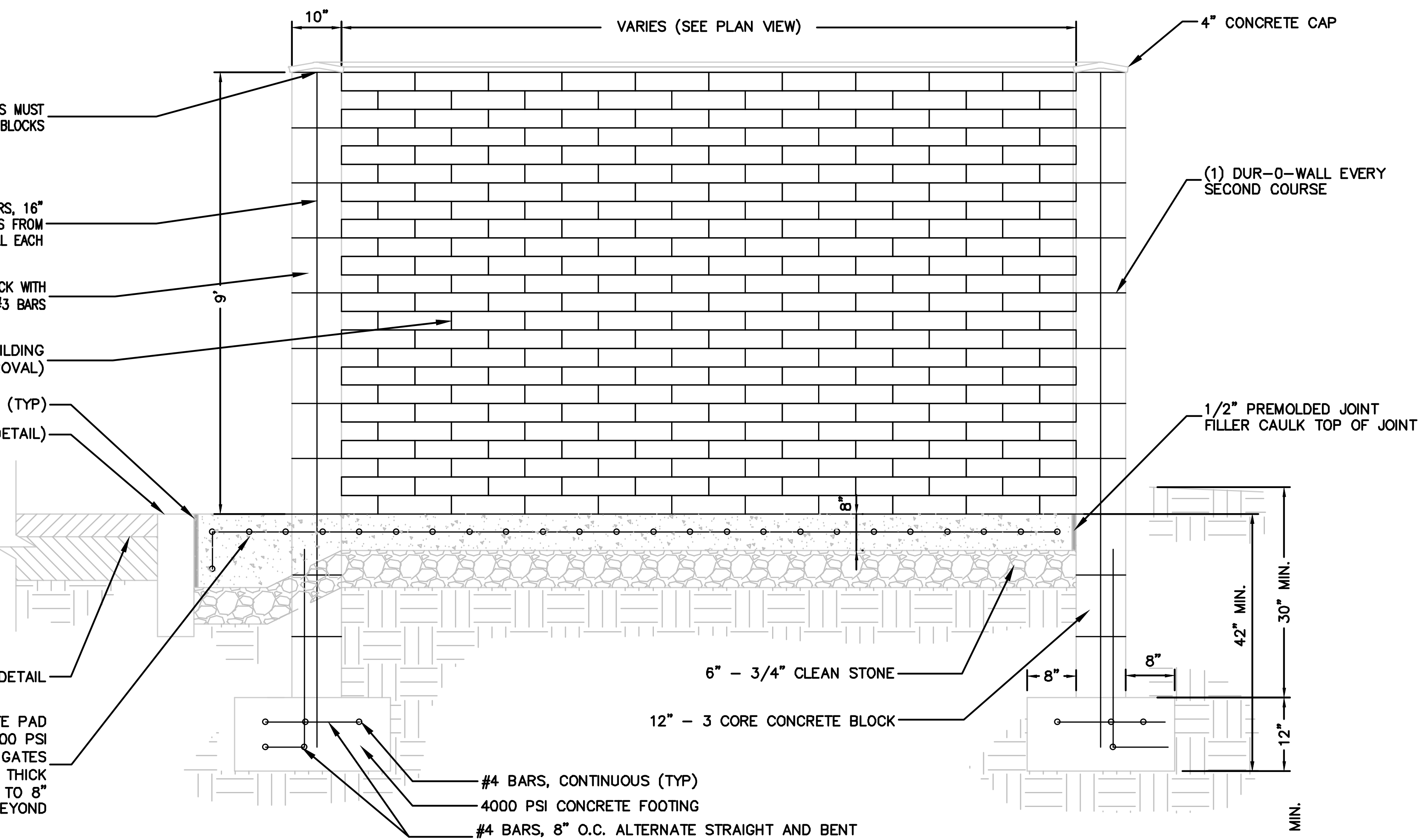
10"
VARIES (SEE PLAN VIEW)
4" CONCRETE CAP
#4 CONTINUOUS VERTICAL BARS MUST END AT TOP OF CONCRETE BLOCKS
#4 CONTINUOUS VERTICAL BARS, 16" O.C. TO MATCH WITH BENT BARS FROM FOOTING. CORE AND GROUT FILL EACH
8" – 3 CORE CONCRETE BLOCK WITH CONTINUOUS VERTICAL #3 BARS
SPLIT FACED BLOCK –MATCH BUILDING COLOR (PROVIDE SAMPLE FOR APPROVAL)
PROVIDE EXPANSION JOINT (TYP)
DEPRESSED FLUSH CURB (SEE DETAIL)
(1) DUR–O–WALL EVERY SECOND COURSE
1/2" PREMOLDED JOINT FILLER CAULK TOP OF JOINT
9'
8"
42" MIN.
30" MIN.
8"
8"
12"
SEE ON–SITE PAVING DETAIL
REINFORCED CONCRETE PAD W/ 4"x4", 6/6 W.W.M. – 4000 PSI CONCRETE W/ 1% SLOPE TOWARDS GATES NOTE: CONCRETE PAD TO BE 12" THICK FOR FIRST 2 FEET AND TAPER TO 8" THICK BEYOND
6" – 3/4" CLEAN STONE
12" – 3 CORE CONCRETE BLOCK
#4 BARS, CONTINUOUS (TYP)
4000 PSI CONCRETE FOOTING
#4 BARS, 8" O.C. ALTERNATE STRAIGHT AND BENT BARS

NOTE: CONTRACTOR SHALL PROVIDE SHOP DRAWING OF BLOCK FOR APPROVAL. WALL PATTERN MAY VARY.

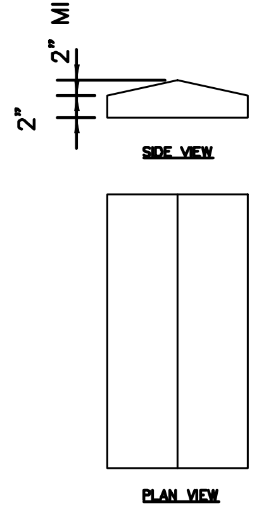
2" MIN.
2"
SIDE VIEW
PLAN VIEW

CONCRETE CAP DETAIL

DUMPSTER ENCLOSURE DETAIL
(SEE PLAN VIEW)

TREE SHALL BEAR SAME RELATION TO FINISHED GRADE AS IT BORE TO PREVIOUS GRADE.

ALL TREES UNDER 3 1/2" CALIPER TO BE GUYED WITH 3 STAKES PER TREE.

ALL TREES OVER 3 1/2" CALIPER TO GUYED WITH DEADMEN, 3 PER TREE

DO NOT CUT LEADER, PRUNE ¼ OF TREE, RETAIN NORMAL SHAPE.

BALL AND BURLAP EXISTING TREES PRIOR TO MOVING.

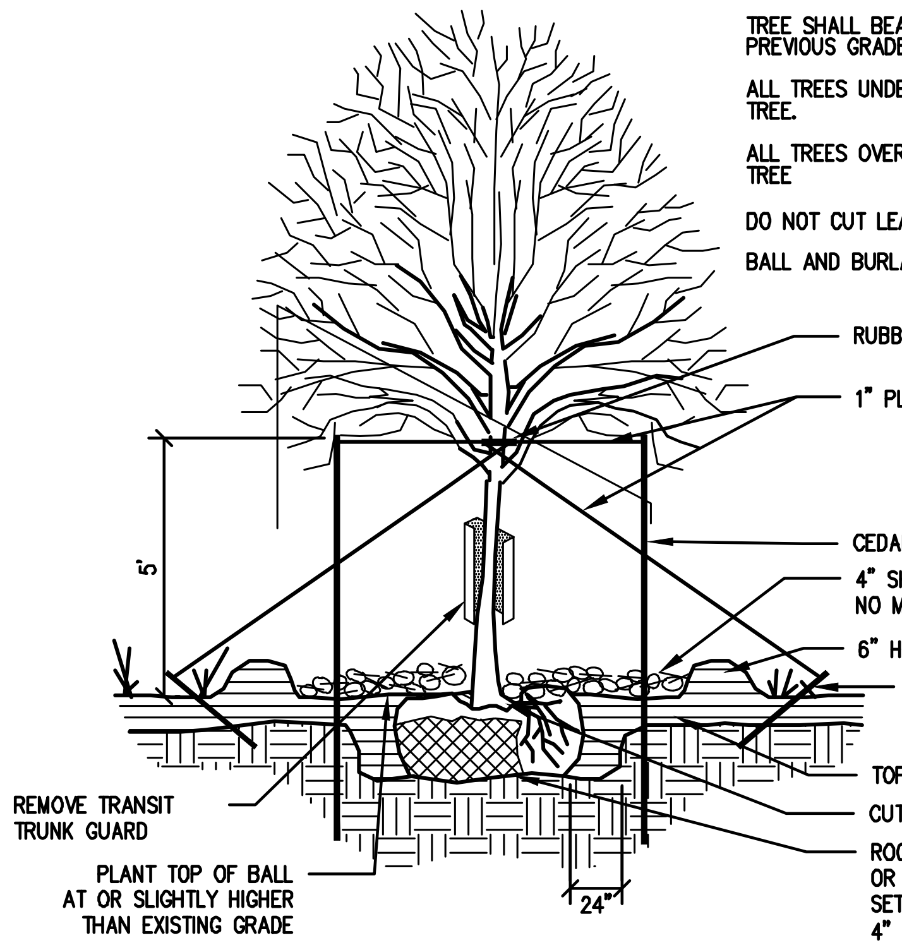
RUBBER HOSE
1" PLASTIC CHAIN
CEDAR STAKE
4" SHREDDED BARK MULCH NO MULCH PLACED AT ROOT COLLAR
6" HIGH CIRCULAR SAUCER AROUND TREE
2" x 8" DEADMAN
5'
TOPSOIL
CUT AND REMOVE BURLAP TOP 1/3 OF BALL
ROOTBALL TO BE PLACED ON NATIVE SOIL OR COMPACTED SUBGRADE TO PREVENT SETTLING SCARIFY SUBSOIL TO MINIMUM 4" DEPTH
REMOVE TRANSIT TRUNK GUARD
PLANT TOP OF BALL AT OR SLIGHTLY HIGHER THAN EXISTING GRADE
24"

TREE PLANTING

SHRUB SHALL BEAR SAME RELATION TO FINISHED GRADE AS IT BORE TO PREVIOUS EXISTING GRADE.

THIN BRANCHES AND FOLIAGE (NOT ALL END TIPS) BY 1/3 RETAINING NORMAL PLANT SHAPE.

CUT & REMOVE BURLAP FROM TOP 1/3 OF BALL AS SHOWN

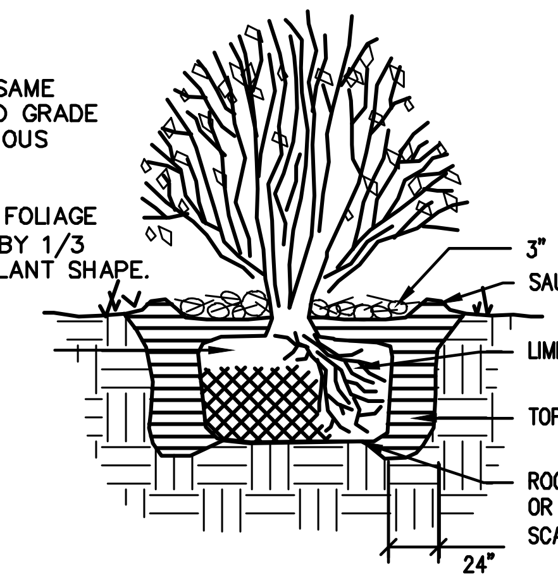
3" SHREDDED BARK MULCH
SAUCER AROUND SHRUB
LIMIT OF BARE ROOT SPREAD
TOPSOIL
ROOTBALL TO BE PLACED ON NATIVE SOIL OR COMPACTED SUBGRADE TO PREVENT SETTLING SCARIFY SUBSOIL TO MINIMUM 4" DEPTH
24"

NOTE:
HOLE FOR SHRUB TO BE DUG TWICE THE DIAMETER OF THE ROOTBALL OR CONTAINER

SHRUB PLANTING

N.T.S.

TREE SHALL BEAR SAME RELATION TO FINISHED GRADE AS IT BORE TO PREVIOUS GRADE.

DO NOT CUT LEADER, PRUNE NEW CANDLES.

BALL AND BURLAP EXISTING TREES PRIOR TO MOVING.

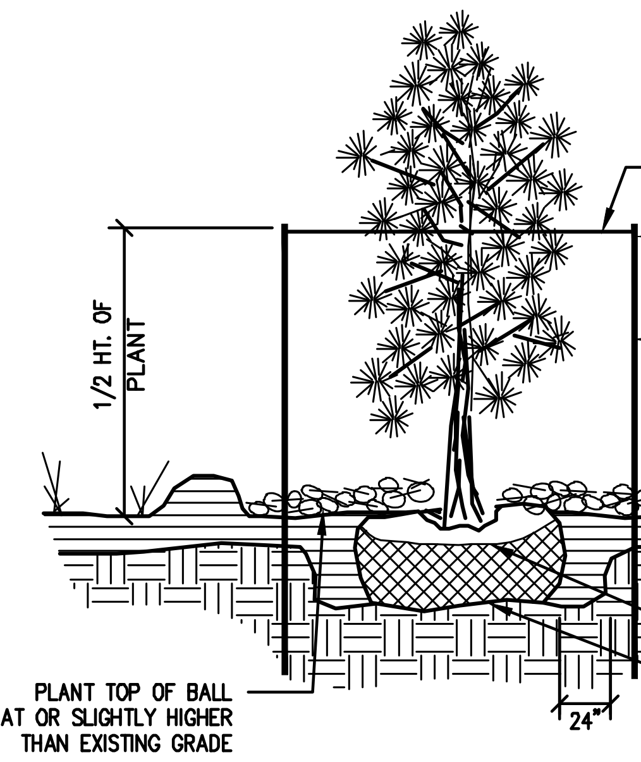
1" PLASTIC CHAIN
POSTS WILL BE CUT OFF AT THE SAME HEIGHT
2 CEDAR STAKES PER TREE
4" SHREDDED BARK MULCH NO MULCH PLACED AT ROOT COLLAR
6" HIGH CIRCULAR SAUCER AROUND TREE
1/2 HT. OF PLANT
TOPSOIL
CUT AND REMOVE BURLAP TOP 1/3 OF BALL
ROOTBALL TO BE PLACED ON NATIVE SOIL OR COMPACTED SUBGRADE TO PREVENT SETTLING SCARIFY SUBSOIL TO MINIMUM 4" DEPTH
PLANT TOP OF BALL AT OR SLIGHTLY HIGHER THAN EXISTING GRADE
24"

EVERGREEN TREE PLANTING

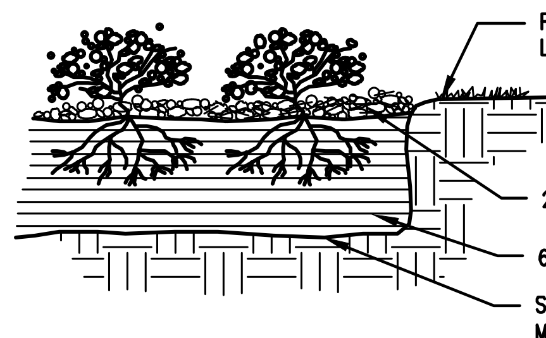
FINISHED GRADE OF ADJACENT LAWN OR PAVEMENT
2" SHREDDED BARK MULCH
6" TOPSOIL
SCARIFY SUBGRADE TO MINIMUM 4" DEPTH

GROUNDCOVER PLANTING

N.T.S.

J:\ENGINEERING PROJECTS\2021\21-010 – 297 DAVIDSON AVE_CAD\DESIGN\21-010 DETAILS (R2).DWG-(1/25/22)

revisions

no.	date	description
1	10/12/21	PER SCD & TWP COMMENTS/NJDEP PERMIT PLAN
2	01/17/22	PER DEP, DRCC & COUNTY COMMENTS

LEGEND

G ⋈	GAS VALVE
Ⓖ	GAS METER
W ⋈	WATER VALVE
☼	HYDRANT
Ⓦ	WATER METER
CS ⊕	CURB STOP
FDC ○	FIRE DEPT. CONNECTION
Ⓓ	DRAINAGE MH
▬	CURB INLET
▤	LAWN INLET
Ⓢ	SANITARY MH
C.O. ○	CLEANOUT
○	BOLLARD
°S	SIGN
☼	LIGHT
Ⓜ	MAIL BOX
⊸	GUY WIRE
–⊖–	UTILITY POLE
Ⓔ	ELECTRIC MH
⊙	CONIFEROUS TREE
⊙	DECIDUOUS TREE
— X —	FENCE
–○——○–	RAILING
▭	WALL
◉	GATE POST
— W —	WATER LINE
— G —	GAS LINE
— E —	ELECTRIC LINE
— S —	SANITARY LINE
—OH—	OVERHEAD WIRES

Engineers
Landscape Architects
Land Surveyors
Planners
575 Route 28, Suite 110
Raritan, N.J. 08869
908–722–1500
Fax 908–722–7035
www.reynoldsgrp.com

The Reynolds Group Inc.

State of New Jersey
Certificate of Authorization
Number 24GA27969200
21MH00004300

F. Mitchel Ardman, P.E., P.P.
Jeffrey D. Reynolds, P.L.A.

F Mitchel Ardman

F. MITCHEL ARDMAN
N.J. PROFESSIONAL ENGINEER LIC. NO. 34317

project

ACCESS SELF STORAGE

BLOCK 502.01, LOTS 45.01 & 46.01
297 & 305 DAVIDSON AVENUE
TOWNSHIP OF FRANKLIN
SOMERSET COUNTY, NEW JERSEY

drawing title

CONSTRUCTION DETAILS

job number 21–010	drawing number 15
scale AS SHOWN	
checked by FMA	
drawn by GH	
date 08/31/2021	sheet 15 of 15

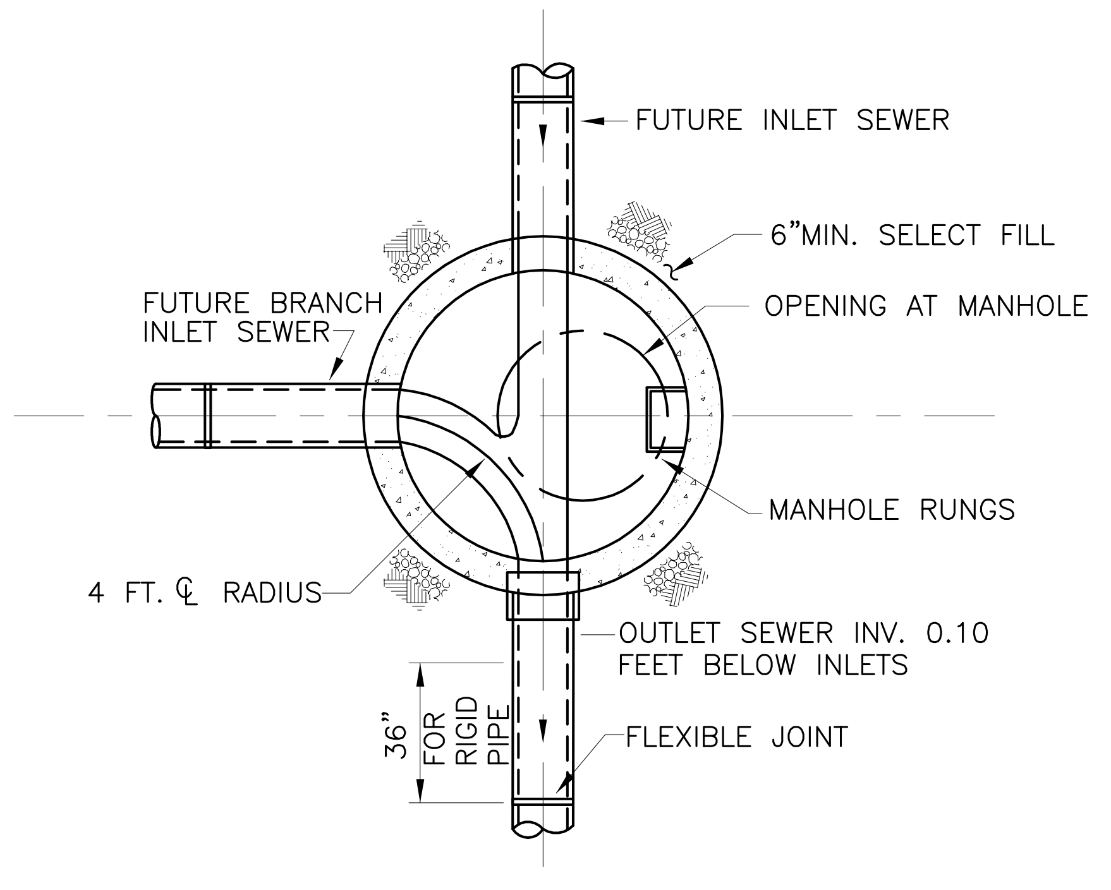
FUTURE INLET SEWER
6"MIN. SELECT FILL
FUTURE BRANCH INLET SEWER
OPENING AT MANHOLE
MANHOLE RUNGS
4 FT. ℄ RADIUS
OUTLET SEWER INV. 0.10 FEET BELOW INLETS
36" FOR RIGID PIPE
FLEXIBLE JOINT

PLAN

NOTES :

1. USE STANDARD AUTHORITY MANHOLE FRAME AND COVER.
2. SPECIAL DETAILS WILL BE PROVIDED FOR SEWERS 27" AND LARGER

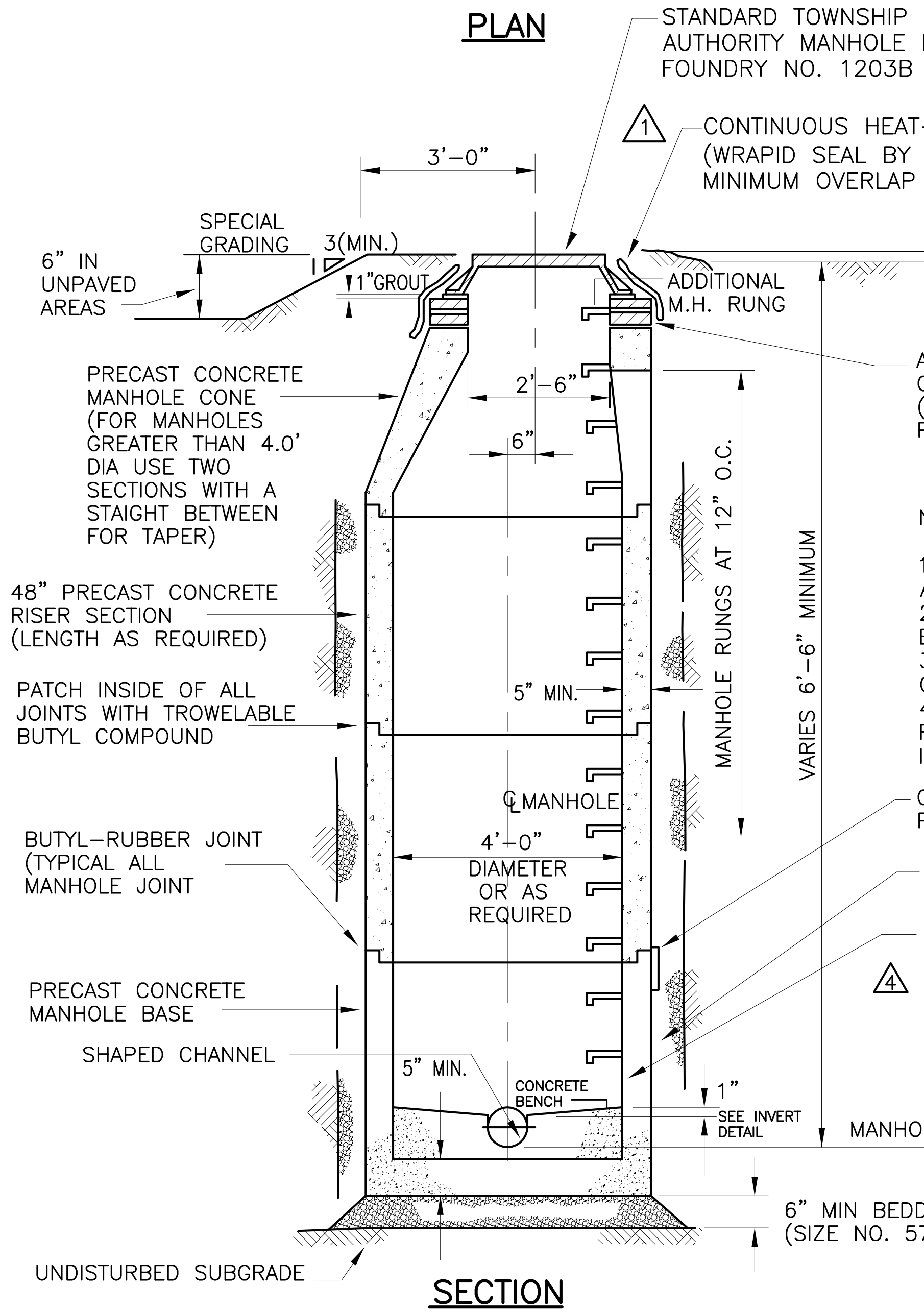
STANDARD TOWNSHIP OF FRANKLIN SEWERAGE AUTHORITY MANHOLE FRAME & COVER CAMPBELL FOUNDRY NO. 1203B OR APPROVED EQUAL 4
1 CONTINUOUS HEAT–SHRINK MEMBRANE PER SPECIFICATIONS (WRAPID SEAL BY CCI PIPELINE SYSTEMS OR EQUAL) 6" MINIMUM OVERLAP TO FRAME & CONE SECTION 4
3'–0"
SPECIAL GRADING
3(MIN.)
6" IN UNPAVED AREAS
1"GROUT
1/2" IN PAVED AREAS
ADDITIONAL M.H. RUNG
PRECAST CONCRETE MANHOLE CONE (FOR MANHOLES GREATER THAN 4.0' DIA USE TWO SECTIONS WITH A STAIGHT BETWEEN FOR TAPER)
2'–6"
6"
ADJUST TO GRADE WITH COURSES OF CONCRETE GRADE RINGS (12" MAXIMUM) AND PLASTER INSIDE AND OUT.
48" PRECAST CONCRETE RISER SECTION (LENGTH AS REQUIRED)
MANHOLE RUNGS AT 12" O.C.
VARIES 6'–6" MINIMUM
PATCH INSIDE OF ALL JOINTS WITH TROWELABLE BUTYL COMPOUND
5" MIN.
℄MANHOLE
BUTYL–RUBBER JOINT (TYPICAL ALL MANHOLE JOINT
4'–0" DIAMETER OR AS REQUIRED
COAT OUTSIDE OF MANHOLE WITH HIGH BUILD POLYAMIDE COAL TAR EPOXY
6" MIN SELECT FILL AROUND MANHOLE. (TYPE I–5 AS PER NJDOT SPECIFICATIONS)
4 COAT INTERIOR WALLS AND BENCH AT FACTORY WITH EPOXY AMINE COATING – WHITE COLOR, COR–COTE SC BY SHERWIN WILLIAMS OR EQUAL. FIELD COAT SEAMS AFTER MORTARING JOINTS
PRECAST CONCRETE MANHOLE BASE
SHAPED CHANNEL
5" MIN.
CONCRETE BENCH
1"
SEE INVERT DETAIL
MANHOLE INVERT
6" MIN BEDDING MATERIAL (SIZE NO. 57 AS PER NJDOT SECIFICATIONS)
UNDISTURBED SUBGRADE

NOTES :

1. SPECIAL GRADING TO BE USED IN UNPAVED AREAS.
2. TOE OF SLOPE SHALL NOT EXTEND BEYOND EASEMENT LINE.
3. SPECIAL GRADING IS SYMMETRICAL AROUND CENTER LINE OF MANHOLE COVER.
4. BENCH & CHANNEL SHALL BE STEEL TROWL FINISHED AND SHALL BE SHAPED TO PERMIT EASY INSTALLATION OF A PLUG INTO ANY PIPE.

SECTION

(BRANCH INLET SEWER NOT SHOWN)

ALL PRECAST MANHOLE SECTIONS SHALL BE MANUFACTURED BY THE WET CAST METHOD AND SHALL MEET THE REQUIREMENTS OF SPECIFICATION A.S.T.M. C–478.

STANDARD MANHOLE

DETAIL A –
N.T.S

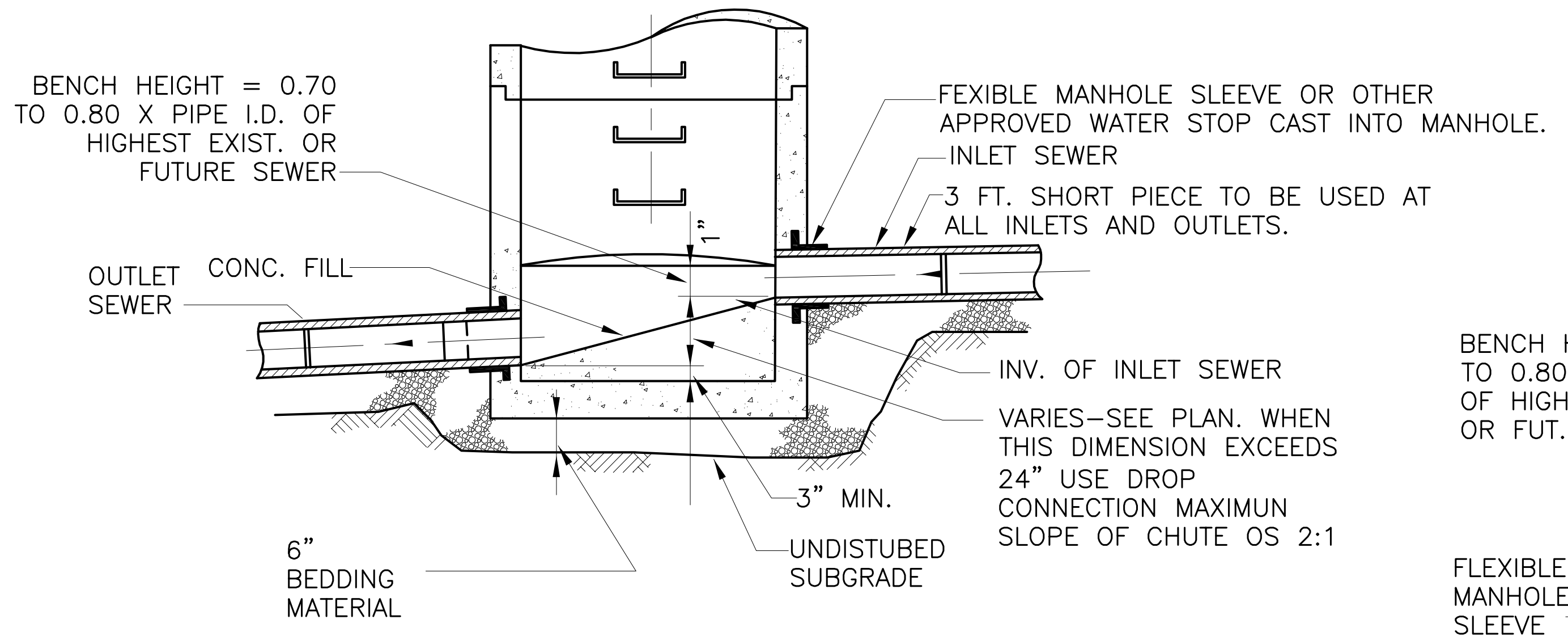
BENCH HEIGHT = 0.70 TO 0.80 X PIPE I.D. OF HIGHEST EXIST. OR FUTURE SEWER
FEXIBLE MANHOLE SLEEVE OR OTHER APPROVED WATER STOP CAST INTO MANHOLE.
INLET SEWER
3 FT. SHORT PIECE TO BE USED AT ALL INLETS AND OUTLETS.
OUTLET SEWER
CONC. FILL
INV. OF INLET SEWER
VARIES–SEE PLAN. WHEN THIS DIMENSION EXCEEDS 24" USE DROP CONNECTION MAXIMUN SLOPE OF CHUTE OS 2:1
3" MIN.
6" BEDDING MATERIAL
UNDISTUBED SUBGRADE

INVERT

DETAIL G –
N.T.S

(BRANCH INLET SEWER NOT SHOWN)

NOTES :

1. CHANNEL WIDTH TO BE BETWEEN 1.0 AND 1.10 X PIPE DIAMETER
2. BENCH AND CHANNEL SHALL HAVE A STEEL TROWL FINISH.

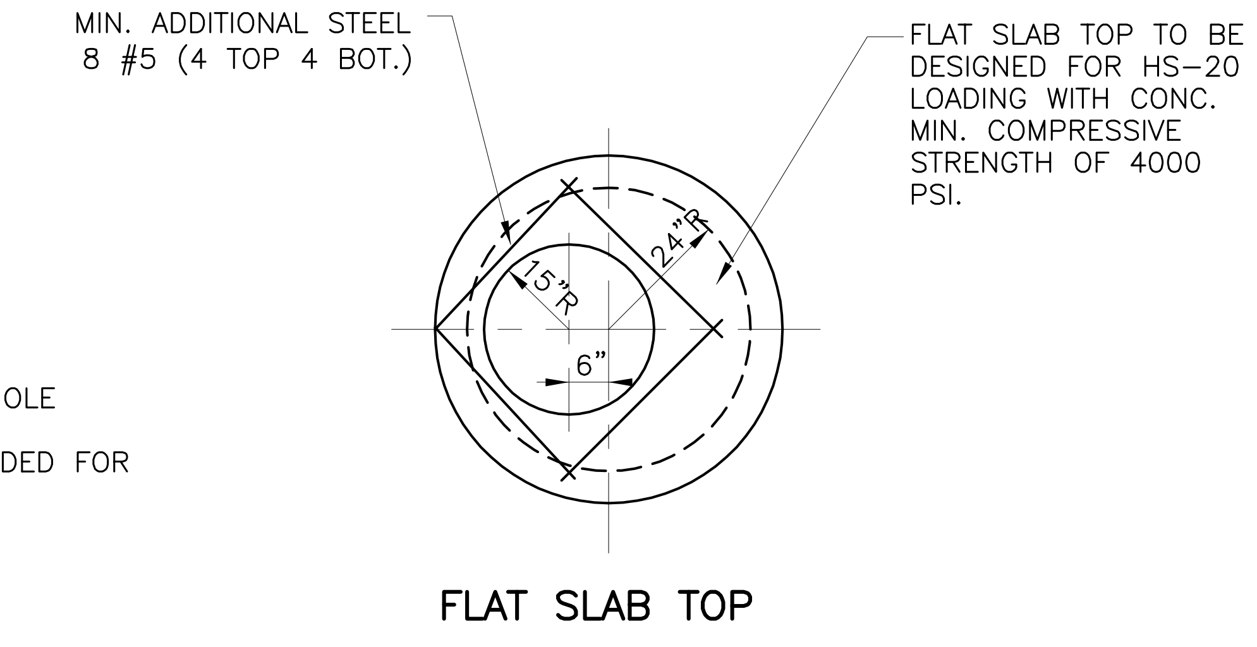
MIN. ADDITIONAL STEEL 8 #5 (4 TOP 4 BOT.)
FLAT SLAB TOP TO BE DESIGNED FOR HS–20 LOADING WITH CONC. MIN. COMPRESSIVE STRENGTH OF 4000 PSI.
15"R
24"
6"

FLAT SLAB TOP

PLAN

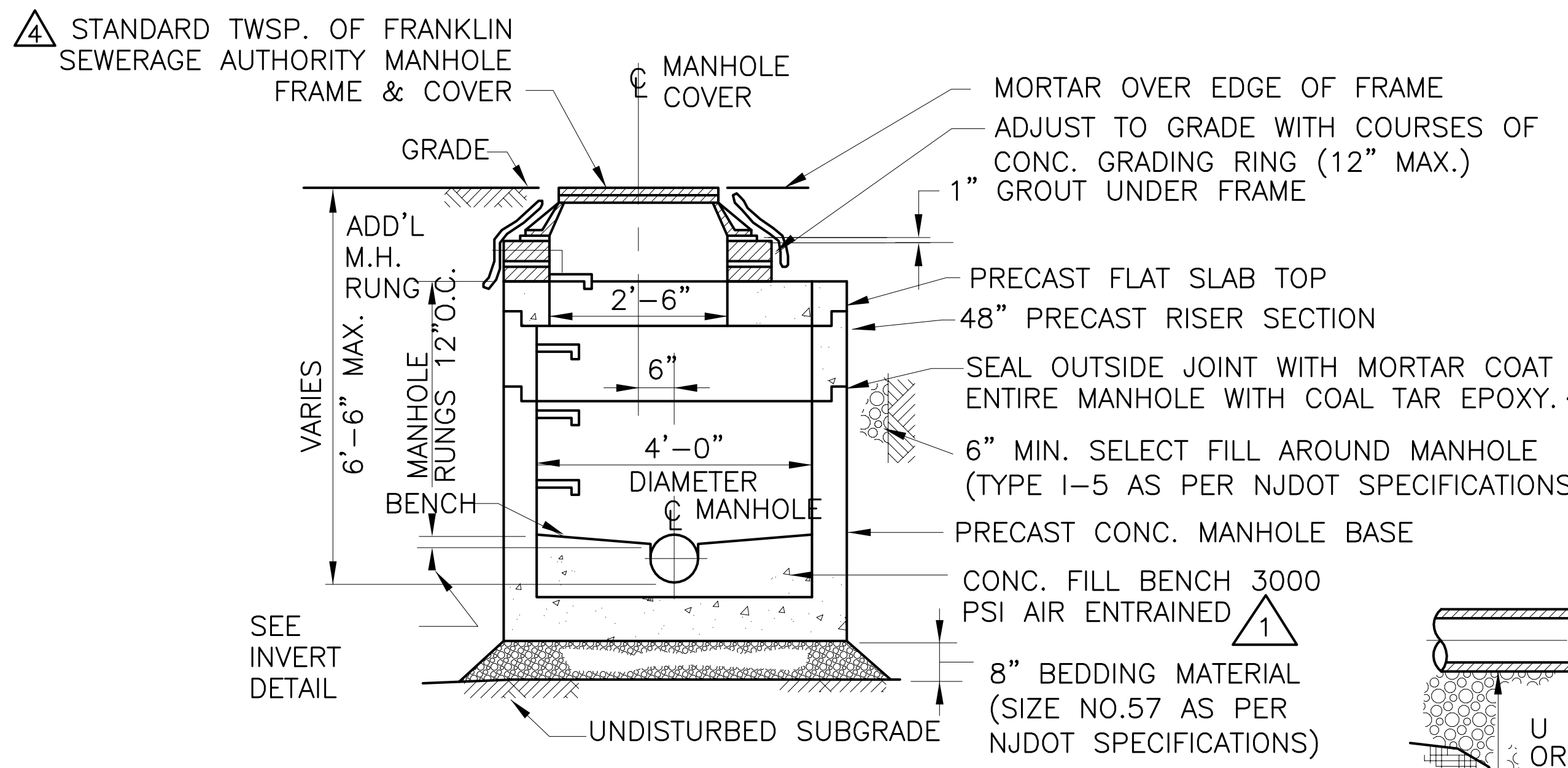
1 STANDARD TWSP. OF FRANKLIN SEWERAGE AUTHORITY MANHOLE FRAME & COVER
℄ MANHOLE COVER
GRADE
MORTAR OVER EDGE OF FRAME
ADJUST TO GRADE WITH COURSES OF CONC. GRADING RING (12" MAX.)
1" GROUT UNDER FRAME
ADD'L M.H. RUNG
PRECAST FLAT SLAB TOP
2'–6"
48" PRECAST RISER SECTION
VARIES 6'–6" MAX.
MANHOLE RUNGS 12"O.C.
6"
SEAL OUTSIDE JOINT WITH MORTAR COAT ENTIRE MANHOLE WITH COAL TAR EPOXY. 2
4'–0" DIAMETER ℄ MANHOLE
6" MIN. SELECT FILL AROUND MANHOLE (TYPE I–5 AS PER NJDOT SPECIFICATIONS)
BENCH
PRECAST CONC. MANHOLE BASE
CONC. FILL BENCH 3000 PSI AIR ENTRAINED 1
SEE INVERT DETAIL
8" BEDDING MATERIAL (SIZE NO.57 AS PER NJDOT SPECIFICATIONS)
UNDISTURBED SUBGRADE

SECTION

NOTE:

1. FOR INLET, OUTLET, BASE AND BRANCH DETAILS SEE INVERT DETAILS
2. INTERIOR COATING AND CONTINUOUS HEAT–SHRINK MEMBRANE SHALL BE AS INDICATED ON STANDARD MANHOLE DETAIL A THIS SHEET.

SHALLOW MANHOLE

DETAIL B –
N.T.S

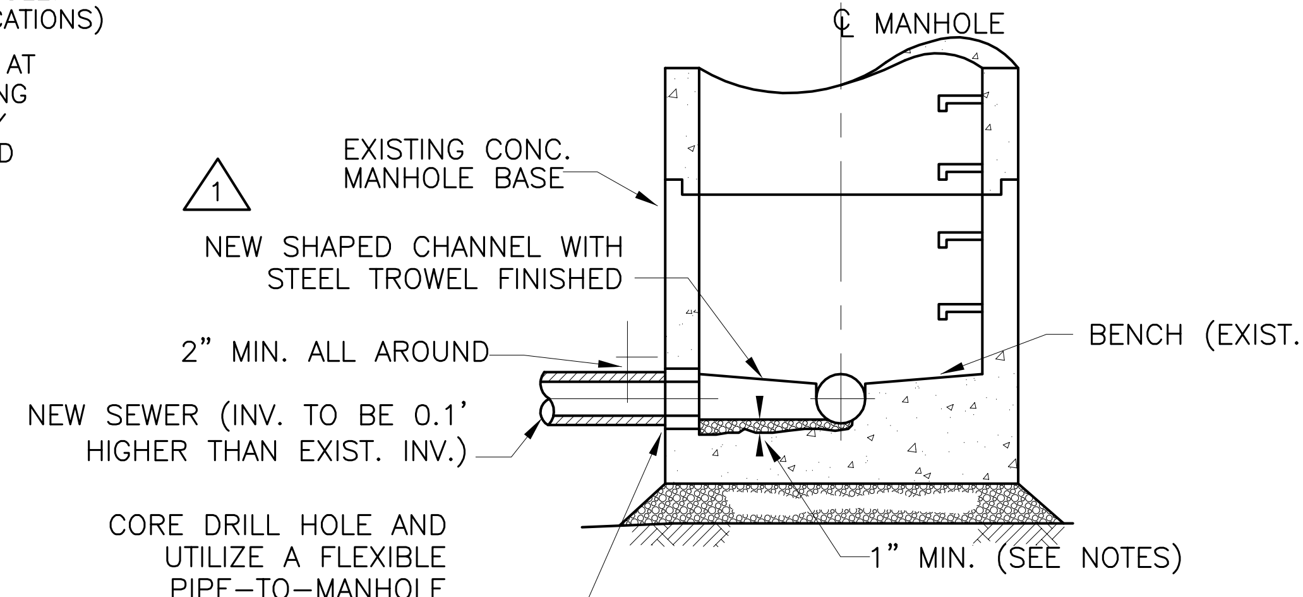
2
℄ MANHOLE
EXISTING CONC. MANHOLE BASE
1 NEW SHAPED CHANNEL WITH STEEL TROWEL FINISHED
2" MIN. ALL AROUND
BENCH (EXIST.)
NEW SEWER (INV. TO BE 0.1' HIGHER THAN EXIST. INV.)
CORE DRILL HOLE AND UTILIZE A FLEXIBLE PIPE–TO–MANHOLE CONNECTOR SUCH AS KOR–N–SEAL OR APPROVED EQUAL
1" MIN. (SEE NOTES)

1. CLEAN AND ROUGHEN ALL SURFACES AGAINST WHICH NEW MORTAR IS TO BE PLACED
2. WHERE REQUIRED, EXISTING CONCRETE SHALL BE REMOVED TO A LINE 1" BEYOND THE NEW CHANNEL LINE AND FINISHED OFF WITH NEW CEMENT MORTAR.

NEW CONNECTION TO EXISTING MANHOLE

DETAIL H –
N.T.S

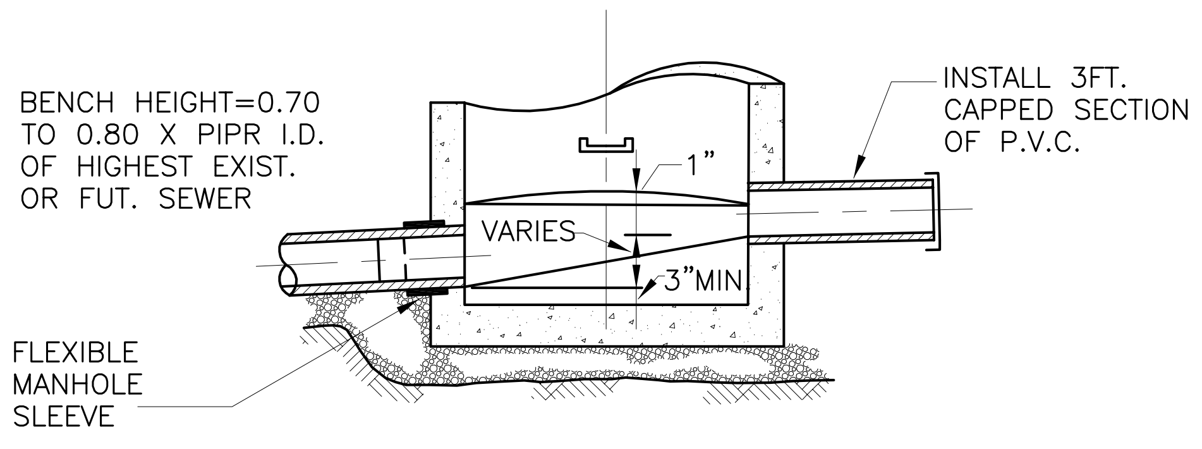
BENCH HEIGHT=0.70 TO 0.80 X PIPR I.D. OF HIGHEST EXIST. OR FUT. SEWER
INSTALL 3FT. CAPPED SECTION OF P.V.C.
1"
VARIES
3"MIN
FLEXIBLE MANHOLE SLEEVE

NOTE:
BENCH SHALL BE PROVIDED EVEN IF EXTENSION IS NOT REQUIRED.

FUTURE EXTENSION

DETAIL K –
N.T.S

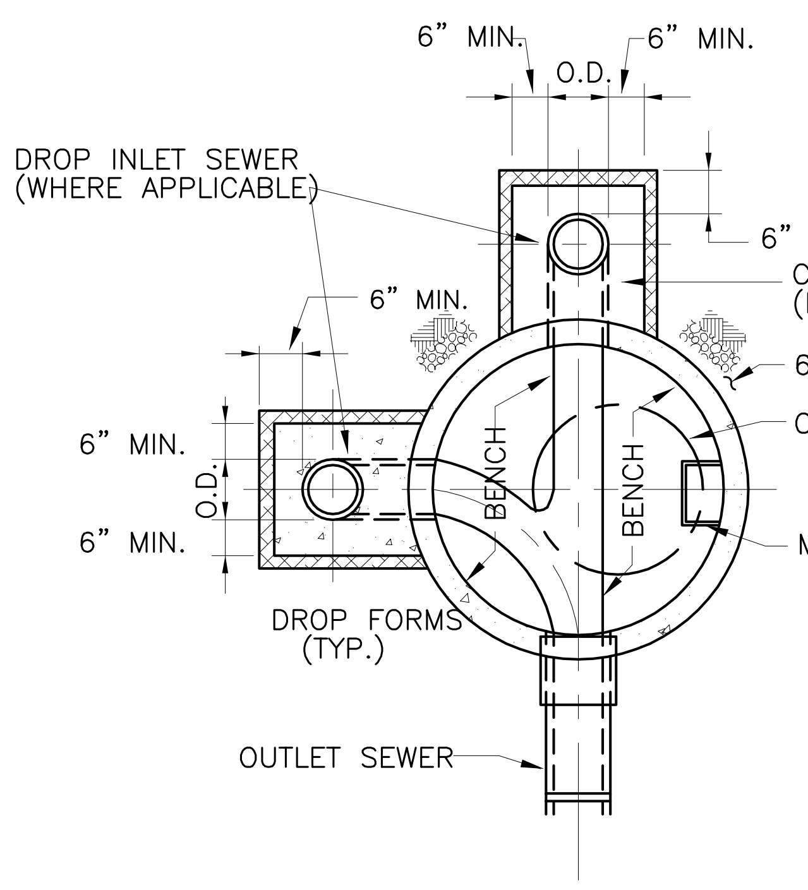
6" MIN.
O.D.
6" MIN.
DROP INLET SEWER (WHERE APPLICABLE)
6" MIN.
6" MIN.
O.D.
6" MIN.
BENCH
BENCH
6" MIN. CONCRETE ENCASEMENT, 3000 PSI (FOR REPLACEMENT, SEE NOTE BELOW)
6" MIN. SELECT FILL
OPENING AT MANHOLE
MANHOLE RUNGS
DROP FORMS (TYP.)
OUTLET SEWER
1

NOTES :

1. ATLANTIC PRECAST CONCRETE DROP MANHOLE COLLARS OR EQUAL SHALL BE USED IN PLACE OF CONCRETE ENCASEMENT FOR 8" DIA. DROP MANHOLES. 12" CONCRETE SLAB TO BE REPLACED BY FOUNDATION MATERIAL FOR PRECAST UNITS.
2. PRECAST UNITS ARE REQUIRED UNLESS JOB CONDITIONS PRECLUDE THEIR USE.

PLAN

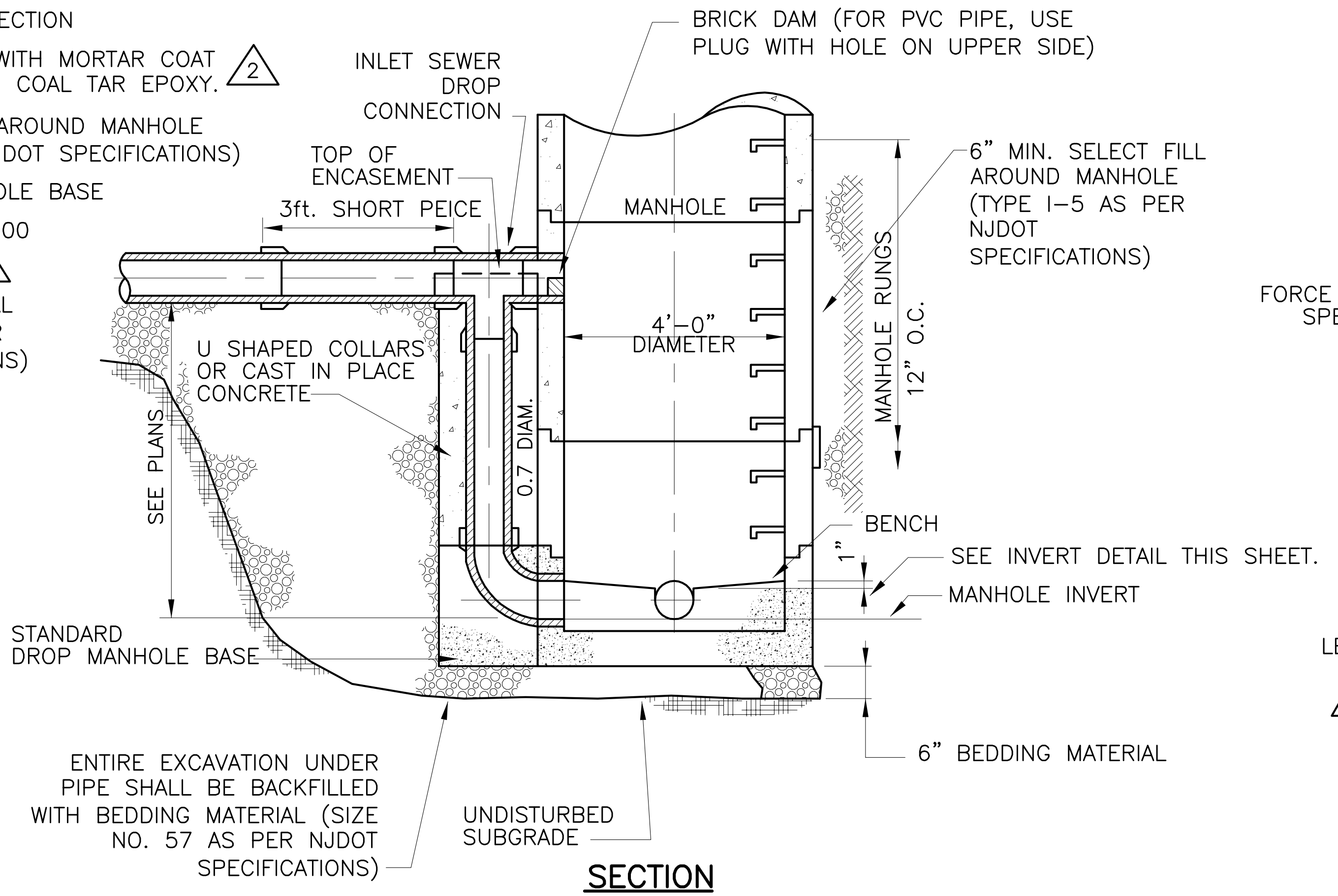
BRICK DAM (FOR PVC PIPE, USE PLUG WITH HOLE ON UPPER SIDE)
INLET SEWER DROP CONNECTION
TOP OF ENCASEMENT
3ft. SHORT PEICE
MANHOLE
6" MIN. SELECT FILL AROUND MANHOLE (TYPE I–5 AS PER NJDOT SPECIFICATIONS)
U SHAPED COLLARS OR CAST IN PLACE CONCRETE
4'–0" DIAMETER
MANHOLE RUNGS 12" O.C.
SEE PLANS
0.7 DIAM.
BENCH
1"
SEE INVERT DETAIL THIS SHEET.
MANHOLE INVERT
STANDARD DROP MANHOLE BASE
ENTIRE EXCAVATION UNDER PIPE SHALL BE BACKFILLED WITH BEDDING MATERIAL (SIZE NO. 57 AS PER NJDOT SPECIFICATIONS)
UNDISTURBED SUBGRADE
6" BEDDING MATERIAL

SECTION

(BRANCH INLET SEWER SHOWN ONLY)

DROP MANHOLE

DETAIL C –
N.T.S

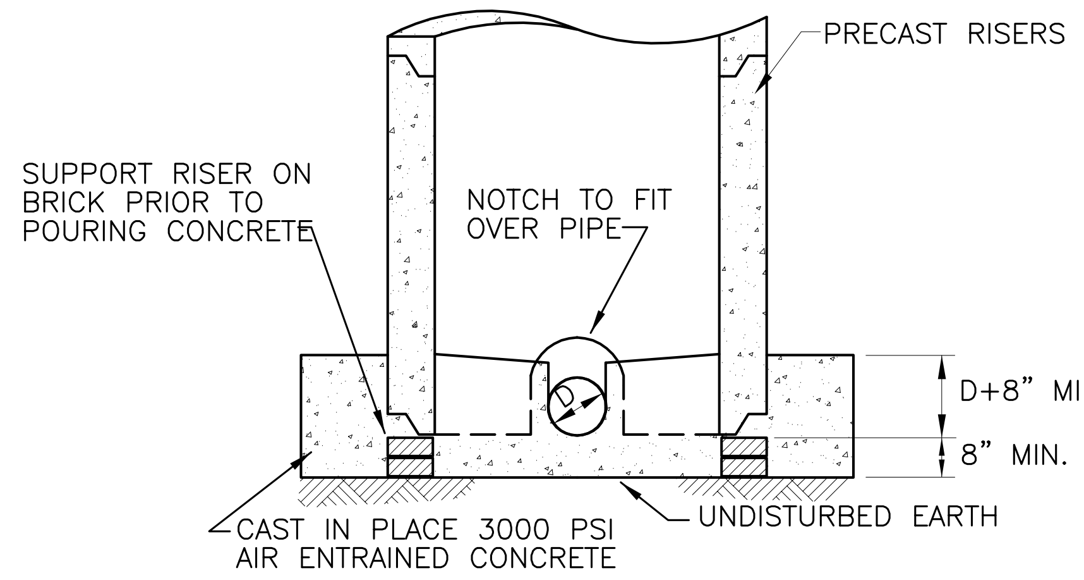
PRECAST RISERS
SUPPORT RISER ON BRICK PRIOR TO POURING CONCRETE
NOTCH TO FIT OVER PIPE
D+8" MIN.
8" MIN.
CAST IN PLACE 3000 PSI AIR ENTRAINED CONCRETE
UNDISTURBED EARTH

DOG HOUSE MANHOLE

DETAIL I –

(FOR INSTALLING NEW MANHOLE ON ACTIVE SEWER)

NOTES :

1. TOP OF PIPE SHALL BE NEATLY CUT AFTER CAST–IN–PLACE CONC. BASE AND BENCH HAS SET
2. FOR DETAIL OF UPPER PART OF MANHOLE, SEE "STANDARD MANHOLE" DETAIL
3. ACRYLIMIDE GEL GROUT INJECTION SHALL BE USED TO STOP LEAKS, IF ANY, AROUND MANHOLE SEAMS AND PIPES.
4. FTSA APPROVAL SHALL BE REQUIRED PRIOR TO INSTALLATION OF ANY DOG HOUSE MANHOLE.
5. INTERIOR COATING AND CONTINUOUS HEAT–SHRINK MEMBRANE SHALL BE AS INDICATED ON STANDARD MANHOLE DETAIL A THIS SHEET.

3 NOTE:

ALL WORK SHALL COMPLY WITH THE REVISION OF THE "RATES, RULES & REGULATIONS APPLICABLE TO SEWER SERVICE IN THE TOWNSHIP OF FRANKLIN, SOMERSET COUNTY, NEW JERSEY" IN EFFECT AT THE TIME CONSTRUCTION BEGINS.

NOTE:
ALL MORTAR TO BE 1 PART PORTLAND CEMENT TO 2 PARTS CLEAN SAND.

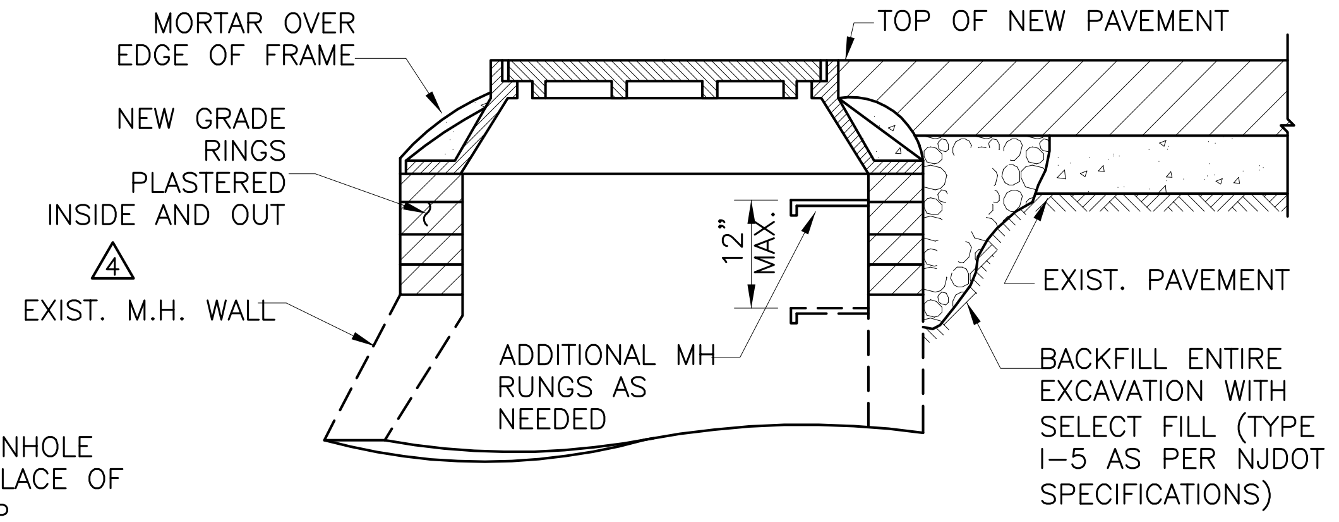
MORTAR OVER EDGE OF FRAME
TOP OF NEW PAVEMENT
NEW GRADE RINGS PLASTERED INSIDE AND OUT
12" MAX.
4 EXIST. M.H. WALL
EXIST. PAVEMENT
ADDITIONAL MH RUNGS AS NEEDED
BACKFILL ENTIRE EXCAVATION WITH SELECT FILL (TYPE I–5 AS PER NJDOT SPECIFICATIONS)

RAISING FRAME ON EXISTING MANHOLE

DETAIL D –
N.T.S

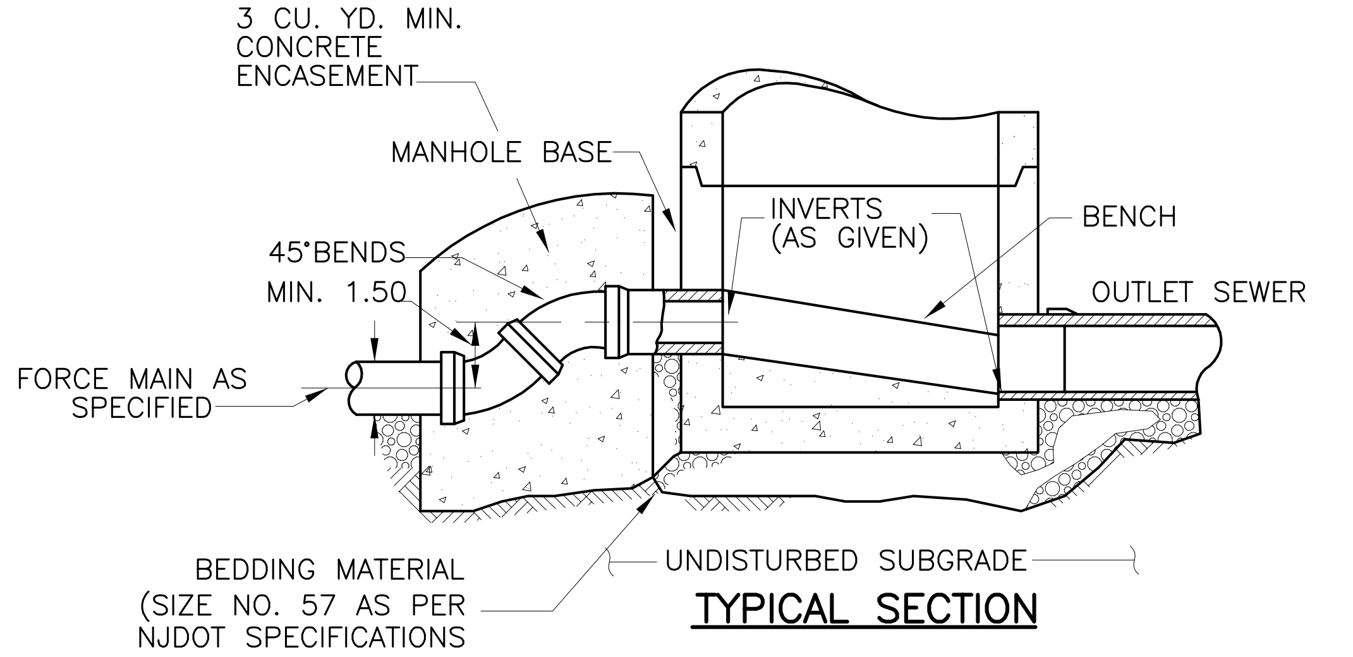
PROVIDE 3 CU. YD. MIN. CONCRETE ENCASEMENT
MANHOLE BASE
INVERTS (AS GIVEN)
BENCH
45°BENDS MIN. 1.50
OUTLET SEWER
FORCE MAIN AS SPECIFIED
BEDDING MATERIAL (SIZE NO. 57 AS PER NJDOT SPECIFICATIONS
UNDISTURBED SUBGRADE

TYPICAL SECTION

FORCE MAIN CONNECTION

DETAIL E –
N.T.S

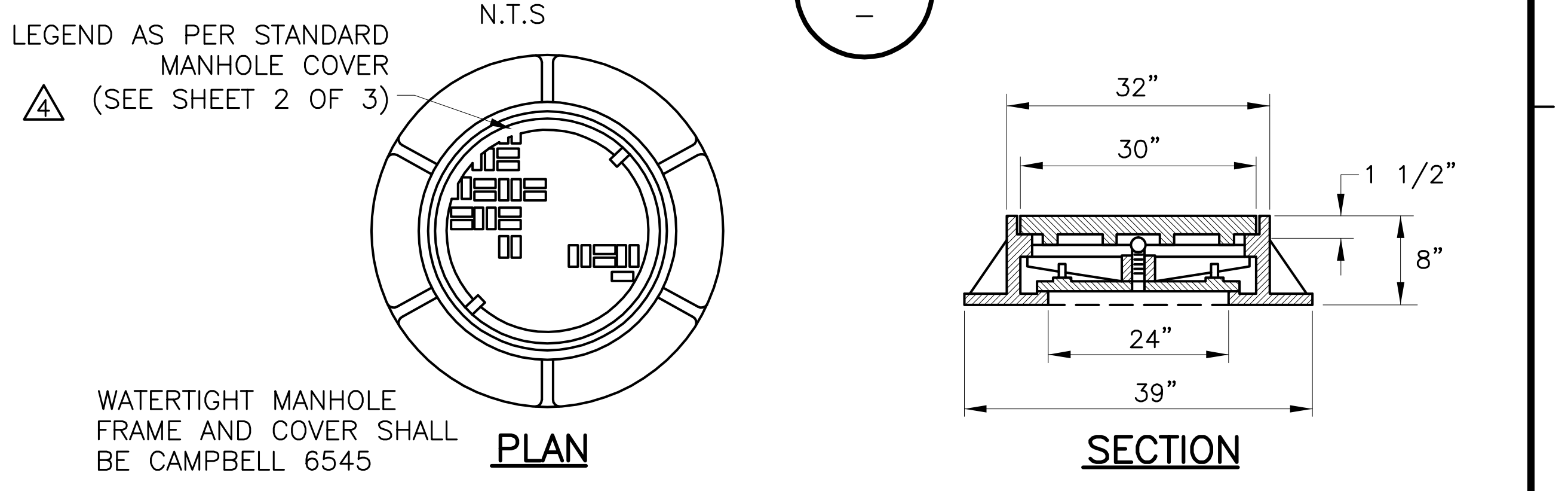
LEGEND AS PER STANDARD MANHOLE COVER
4 (SEE SHEET 2 OF 3)
WATERTIGHT MANHOLE FRAME AND COVER SHALL BE CAMPBELL 6545
32"
30"
1 1/2"
8"
24"
39"

PLAN

SECTION

WATERTIGHT MANHOLE FRAME AND COVER

DETAIL F –
N.T.S

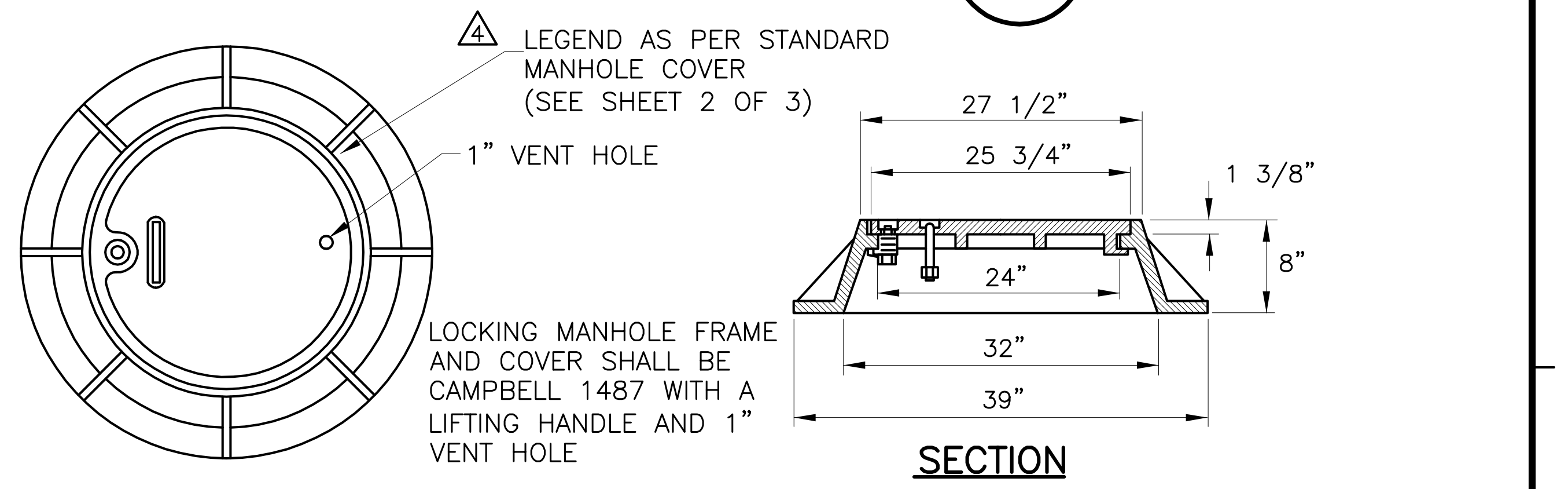
4 LEGEND AS PER STANDARD MANHOLE COVER (SEE SHEET 2 OF 3)
1" VENT HOLE
27 1/2"
25 3/4"
1 3/8"
24"
8"
32"
39"
LOCKING MANHOLE FRAME AND COVER SHALL BE CAMPBELL 1487 WITH A LIFTING HANDLE AND 1" VENT HOLE

PLAN

SECTION

LOCKING MANHOLE FRAME AND COVER

DETAIL J –
N.T.S

NOTE: SHALL BE USED WHERE SPECIFIED ON PLANS IN REMOTE EASEMENTS NOT SUBJECT TO FLOODING

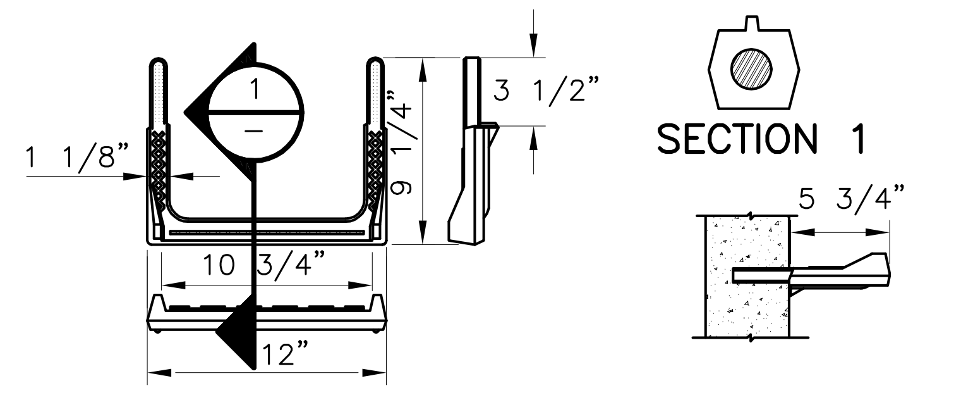
1
1
1 1/8"
10 3/4"
12"
9 1/4"
3 1/2"
5 3/4"

SECTION 1

COPOLYMER MANHOLE RUNG

DETAIL L –
N.T.S

REV. NO.	DATE	DRWN	CHKD	REMARKS
4	10/13	CDM	FTSA	REVISIONS TO UPDATE RATES, RULES AND REGULATIONS
3	5/00	CDM	FTSA	GENERAL NOTE
2	2/98	CDM	FTSA	
1	5/97	CDM	FTSA	MANHOLE COATINGS, ENCAPSULATION SYSTEM, BEDDING

DESIGNED BY: H. MATTESON
DRAWN BY: D. GARVEY
SHEET CHK'D BY: X
CROSS CHK'D BY: X
APPROVED BY: X
DATE: OCTOBER 2013

CDM Smith
CDM Smith Inc.
110 Fieldcrest Avenue, #8, 6th Floor
Edison, NJ 08837
Tel: (732) 225-7000

FRANKLIN TOWNSHIP SEWERAGE AUTHORITY
SOMERSET COUNTY, NEW JERSEY

STANDARD DETAILS I

PROJECT NO. 105979–89351
FILE NAME: CSTDI001
SHEET NO.
1 OF 3

XREFs: [CDMS_2436]   Images: []
Last saved by: GENCORELLIRJ   Time: 10/7/2014 2:32:25 PM
pw:\\dacpwapp1:PW_XM1\5399\99168\03 Reports and Studies\09 CADD Figures and Graphics\CSTDI001.dwg

© 2013 CDM SMITH ALL RIGHTS RESERVED.
REUSE OF DOCUMENTS: THESE DOCUMENTS AND DESIGNS PROVIDED BY PROFESSIONAL SERVICE, INCORPORATED HEREIN, ARE THE PROPERTY OF CDM SMITH AND ARE NOT TO BE USED, IN WHOLE OR PART, FOR ANY OTHER PROJECT WITHOUT THE WRITTEN AUTHORIZATION OF CDM SMITH.

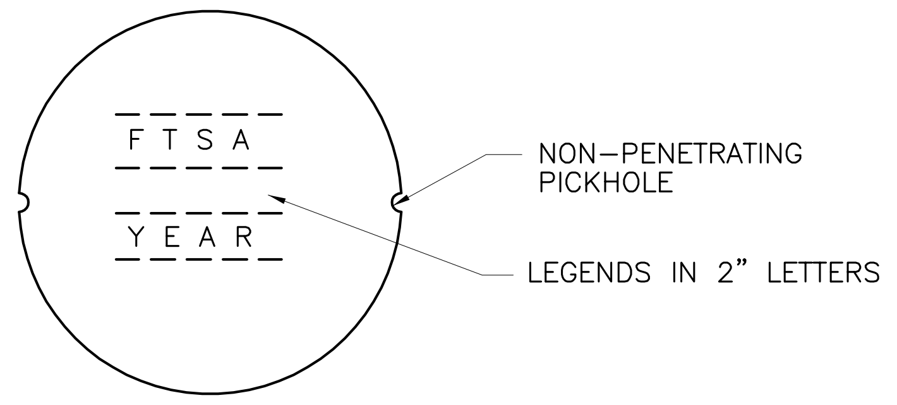
F T S A
Y E A R
NON-PENETRATING PICKHOLE
LEGENDS IN 2" LETTERS

STANDARD MANHOLE COVER

DETAIL A – N.T.S

NOTES :

1. MANHOLE COVERS SHALL INDICATES "FTSA" AND YEAR
2. SEATING SURFACES OF MANHOLE FRAME AND COVERS SHALL BE MACHINED TO INSURE A NON-CHATTERING FIT. MANHOLE FRAMES AND COVERS SHALL BE PROPERLY CLEANED AND DIP COATED IN A WATERPROOF ASPHALTUM PAINT.
3. MANHOLE COVERS TO BE CAMPBELL NO. 1203 B OR AN APPROVED EQUAL.
4. LETTERING TO BE APPROVED BY AUTHORITY PRIOR TO CASTING.
5. NO STANDARD COVERS ARE TO HAVE VENTS.

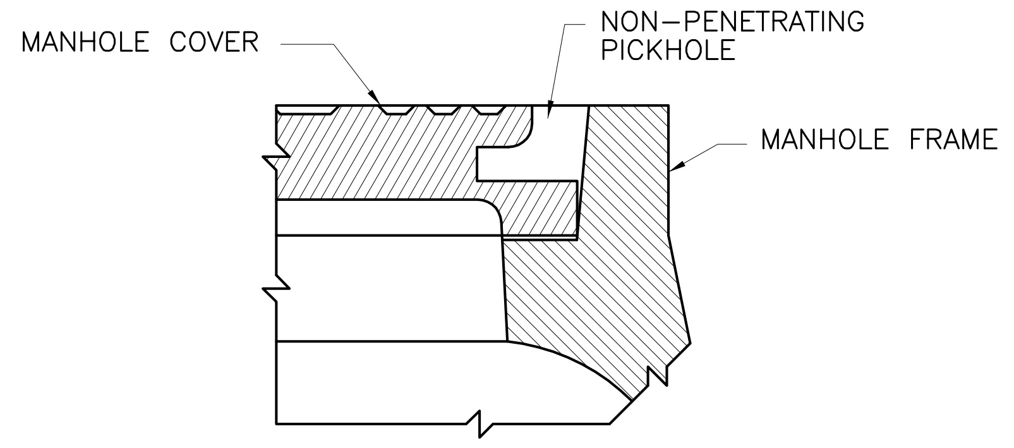
MANHOLE COVER
NON-PENETRATING PICKHOLE
MANHOLE FRAME

SPECIAL PICKHOLE

DETAIL E – N.T.S

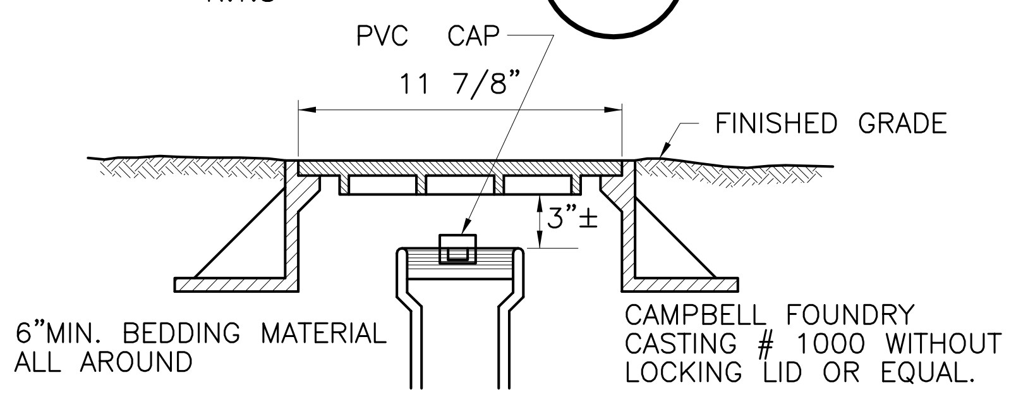
PVC CAP
11 7/8"
FINISHED GRADE
3"±
6"MIN. BEDDING MATERIAL ALL AROUND
CAMPBELL FOUNDRY CASTING # 1000 WITHOUT LOCKING LID OR EQUAL.

RISER COVER

DETAIL F – N.T.S

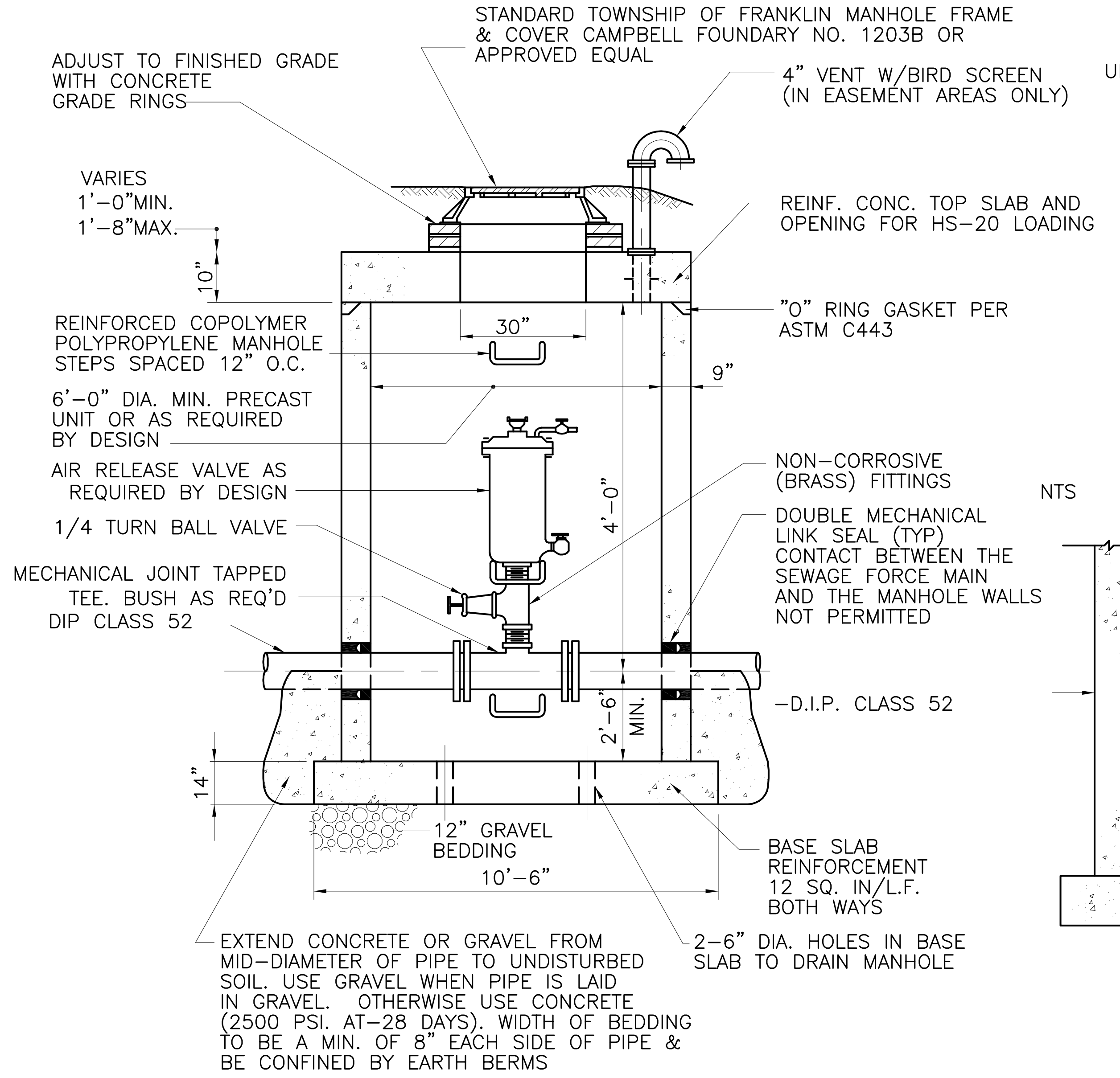
STANDARD TOWNSHIP OF FRANKLIN MANHOLE FRAME & COVER CAMPBELL FOUNDARY NO. 1203B OR APPROVED EQUAL
ADJUST TO FINISHED GRADE WITH CONCRETE GRADE RINGS
4" VENT W/BIRD SCREEN (IN EASEMENT AREAS ONLY)
VARIES 1'-0"MIN. 1'-8"MAX.
10"
REINF. CONC. TOP SLAB AND OPENING FOR HS-20 LOADING
REINFORCED COPOLYMER POLYPROPYLENE MANHOLE STEPS SPACED 12" O.C.
30"
"O" RING GASKET PER ASTM C443
9"
6'-0" DIA. MIN. PRECAST UNIT OR AS REQUIRED BY DESIGN
AIR RELEASE VALVE AS REQUIRED BY DESIGN
NON-CORROSIVE (BRASS) FITTINGS
4'-0"
1/4 TURN BALL VALVE
DOUBLE MECHANICAL LINK SEAL (TYP) CONTACT BETWEEN THE SEWAGE FORCE MAIN AND THE MANHOLE WALLS NOT PERMITTED
MECHANICAL JOINT TAPPED TEE. BUSH AS REQ'D
DIP CLASS 52
–D.I.P. CLASS 52
2'-6" MIN.
14"
12" GRAVEL BEDDING
10'-6"
BASE SLAB REINFORCEMENT 12 SQ. IN/L.F. BOTH WAYS
EXTEND CONCRETE OR GRAVEL FROM MID-DIAMETER OF PIPE TO UNDISTURBED SOIL. USE GRAVEL WHEN PIPE IS LAID IN GRAVEL. OTHERWISE USE CONCRETE (2500 PSI. AT-28 DAYS). WIDTH OF BEDDING TO BE A MIN. OF 8" EACH SIDE OF PIPE & BE CONFINED BY EARTH BERMS
2-6" DIA. HOLES IN BASE SLAB TO DRAIN MANHOLE

SEWAGE FORCE MAIN AIR RELEASE VLAVE

DETAIL I – N.T.S

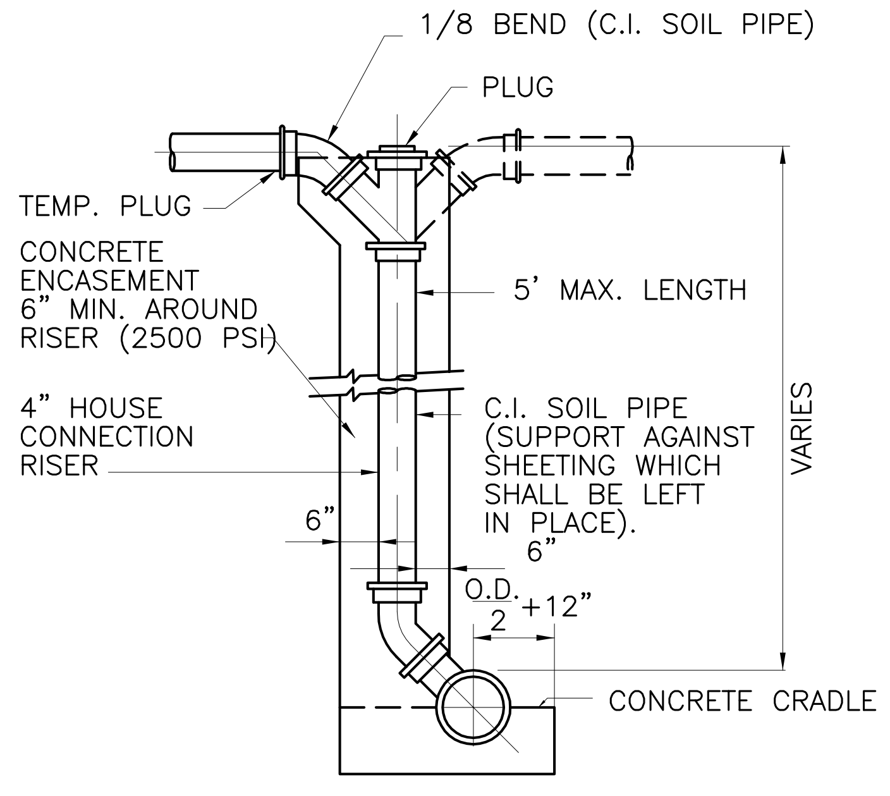
1/8 BEND (C.I. SOIL PIPE)
PLUG
TEMP. PLUG
CONCRETE ENCASEMENT 6" MIN. AROUND RISER (2500 PSI)
5' MAX. LENGTH
4" HOUSE CONNECTION RISER
C.I. SOIL PIPE (SUPPORT AGAINST SHEETING WHICH SHALL BE LEFT IN PLACE).
6"
6"
O.D./2 +12"
VARIES
CONCRETE CRADLE

RISER

DETAIL B – N.T.S

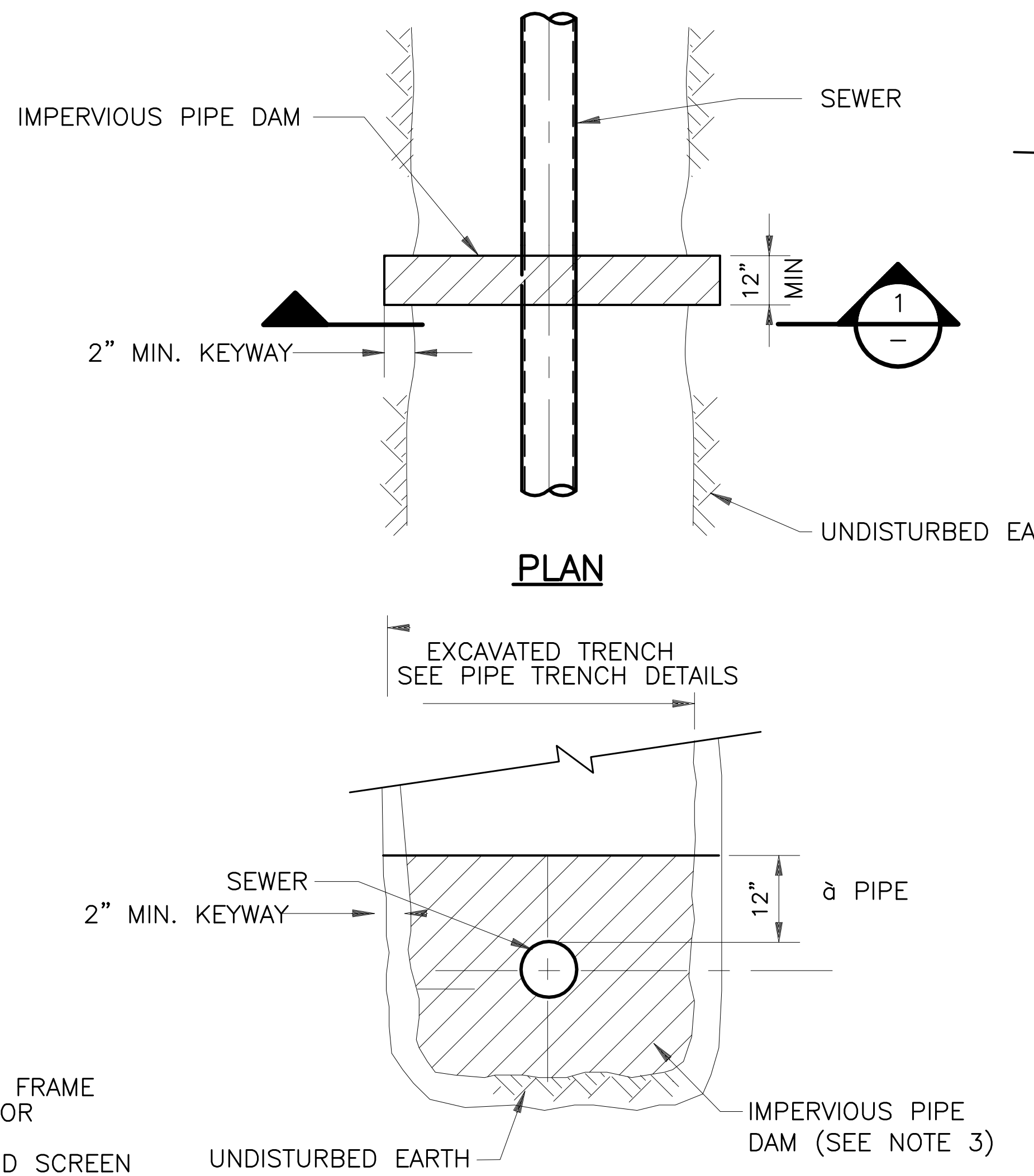
IMPERVIOUS PIPE DAM
SEWER
12" MIN
2" MIN. KEYWAY
1 –
UNDISTURBED EARTH
PLAN
EXCAVATED TRENCH SEE PIPE TRENCH DETAILS
SEWER
2" MIN. KEYWAY
12"
à PIPE
UNDISTURBED EARTH
IMPERVIOUS PIPE DAM (SEE NOTE 3)

SECTION 1

NOTES:

1. IMPERVIOUS PIPE DAMS SHALL BE INSTALLED A MAXIMUM OF 300 FEET APART, WITH AT LEAST ONE DAM BETWEEN MANHOLES.
2. IMPERVIOUS PIPE DAMS SHALL BE INSTALLED EQUIDISTANT FROM PIPE JOINTS.
3. IMPERVIOUS PIPE DAM SHALL BE NATURAL CLAY, MANUFACTURED CLAY PANELS, CONCRETE, OR OTHER SUITABLE APPROVED MATERIAL AND SHALL HAVE A MAXIMUM PERMIABILITY OF 1 X 10^{-5} CM/SEC.

△3 TYPICAL PIPE TRENCH DAM

DETAIL G – N.T.S

NTS

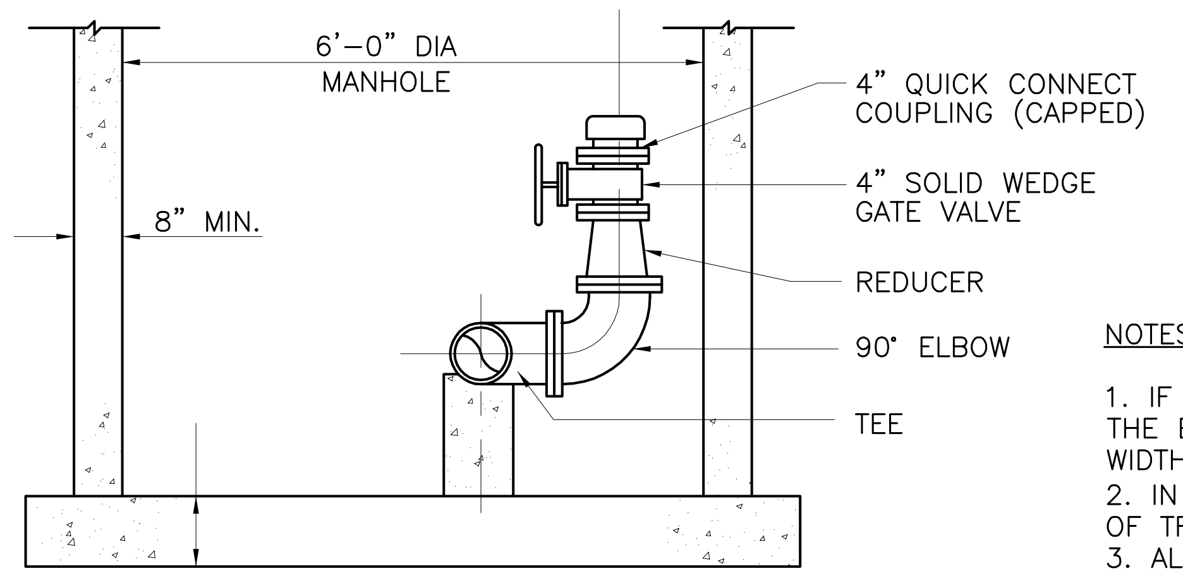
6'-0" DIA MANHOLE
8" MIN.
4" QUICK CONNECT COUPLING (CAPPED)
4" SOLID WEDGE GATE VALVE
REDUCER
90° ELBOW
TEE

NOTE: USE DIP CLASS 52 THROUGH MANHOLE SIMILAR TO SEWAGE FORCE MAIN AIR RELEASE VALVE DETAIL.

FORCE MAIN BLOW OFF

DETAIL J – N.T.S

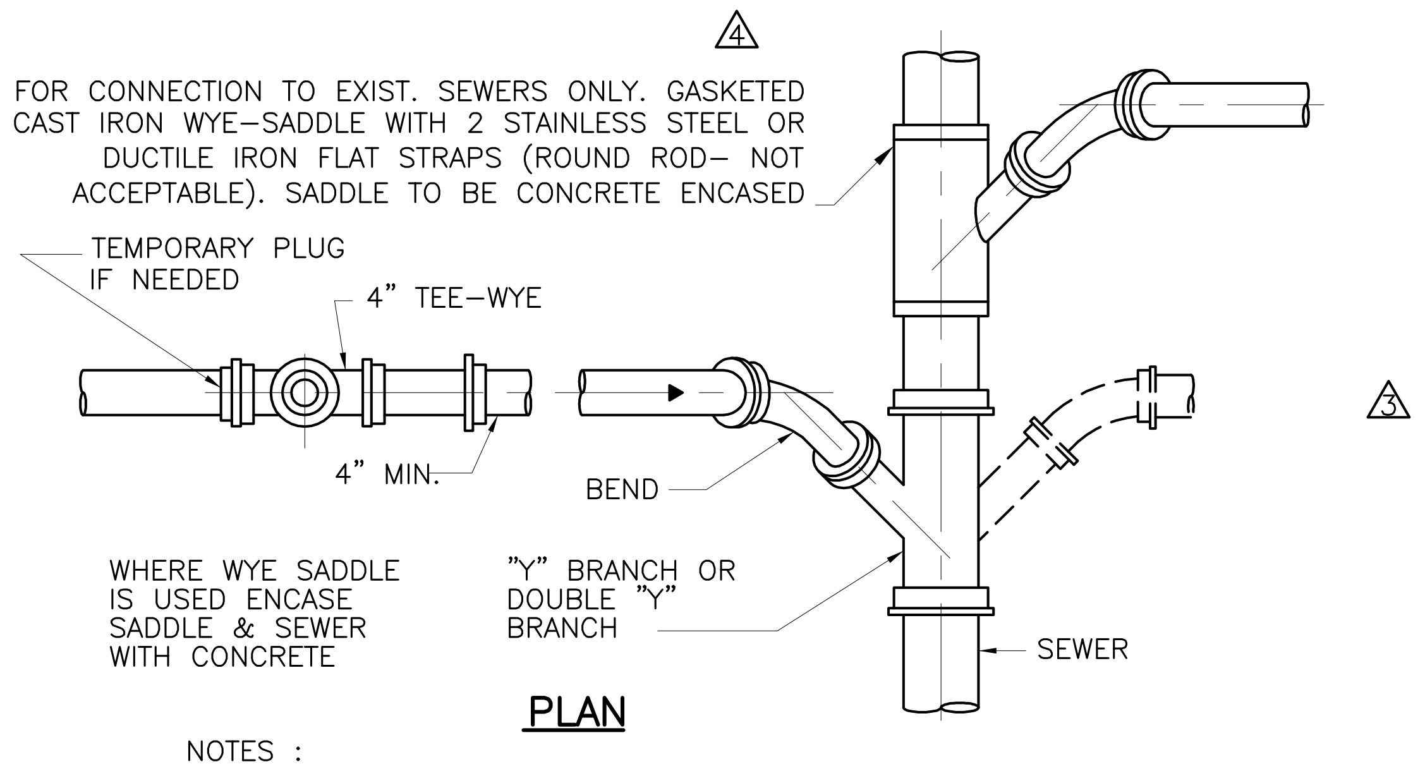
△4
FOR CONNECTION TO EXIST. SEWERS ONLY. GASKETED CAST IRON WYE-SADDLE WITH 2 STAINLESS STEEL OR DUCTILE IRON FLAT STRAPS (ROUND ROD- NOT ACCEPTABLE). SADDLE TO BE CONCRETE ENCASED
TEMPORARY PLUG IF NEEDED
4" TEE-WYE
4" MIN.
BEND
WHERE WYE SADDLE IS USED ENCASE SADDLE & SEWER WITH CONCRETE
"Y" BRANCH OR DOUBLE "Y" BRANCH
SEWER

PLAN

NOTES :

1. CLEANOUT TO BE LOCATED IN GRASSED AREA BETWEEN SIDEWALK AND CURB. CLEANOUTS WILL NOT BE PERMITTED IN DRIVEWAYS OR SIDEWALKS.
2. LATERAL TO BE SAME SIZE FOR ENTIRE LENGTH FROM BUILDING TO SEWER, 4" OR 6" PVC SCH. 40 △2

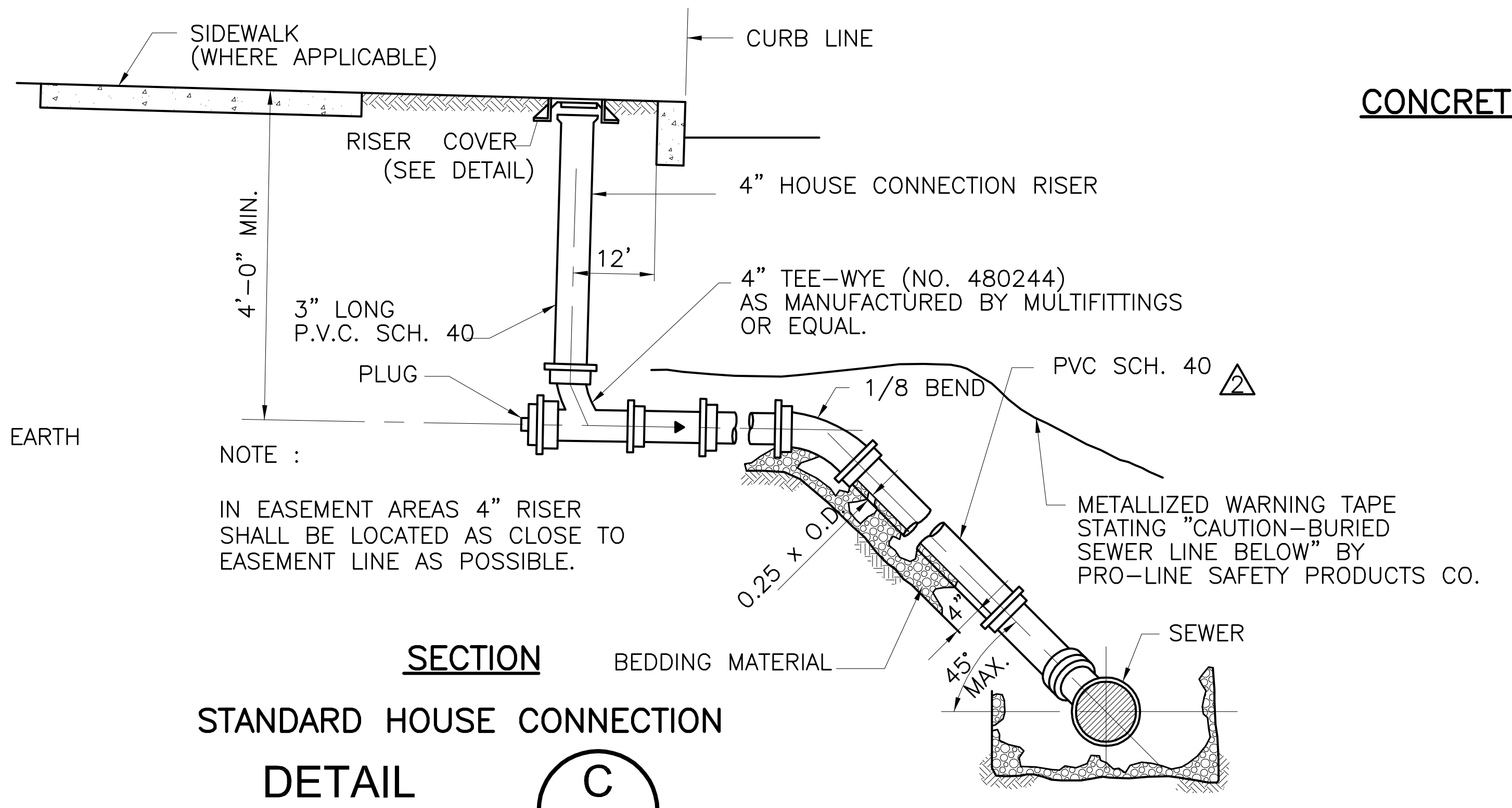
SIDEWALK (WHERE APPLICABLE)
CURB LINE
RISER COVER (SEE DETAIL)
4" HOUSE CONNECTION RISER
4'-0" MIN.
12'
4" TEE-WYE (NO. 480244) AS MANUFACTURED BY MULTIFITTINGS OR EQUAL.
3" LONG P.V.C. SCH. 40
PLUG
1/8 BEND
PVC SCH. 40 △2
0.25 x O.D.
4"
METALLIZED WARNING TAPE STATING "CAUTION-BURIED SEWER LINE BELOW" BY PRO-LINE SAFETY PRODUCTS CO.
SEWER
45° MAX.
BEDDING MATERIAL

NOTE :

IN EASEMENT AREAS 4" RISER SHALL BE LOCATED AS CLOSE TO EASEMENT LINE AS POSSIBLE.

SECTION

STANDARD HOUSE CONNECTION

DETAIL C – N.T.S

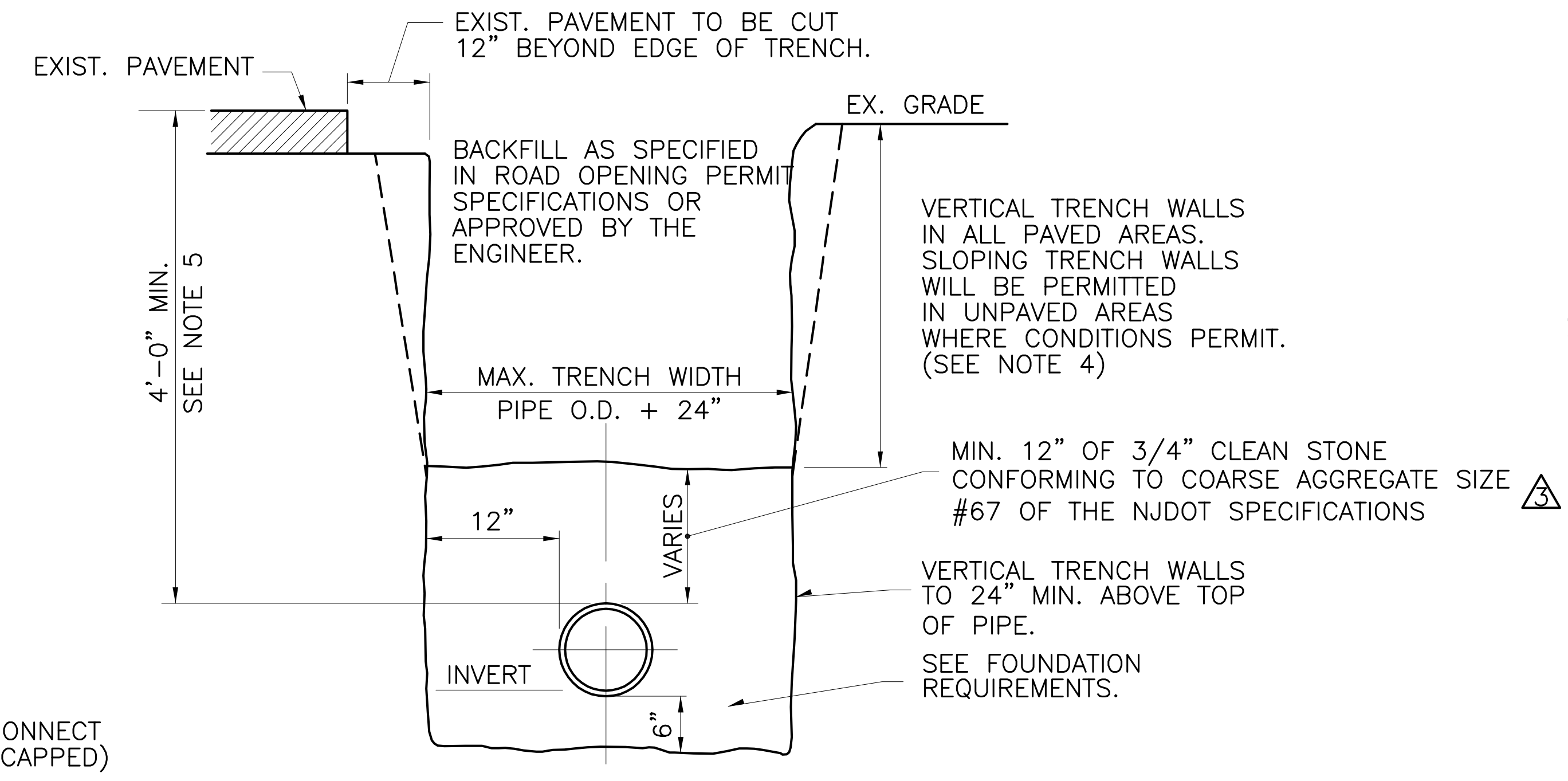
EXIST. PAVEMENT
EXIST. PAVEMENT TO BE CUT 12" BEYOND EDGE OF TRENCH.
EX. GRADE
BACKFILL AS SPECIFIED IN ROAD OPENING PERMIT SPECIFICATIONS OR APPROVED BY THE ENGINEER.
VERTICAL TRENCH WALLS IN ALL PAVED AREAS. SLOPING TRENCH WALLS WILL BE PERMITTED IN UNPAVED AREAS WHERE CONDITIONS PERMIT. (SEE NOTE 4)
4'-0" MIN. SEE NOTE 5
MAX. TRENCH WIDTH PIPE O.D. + 24"
MIN. 12" OF 3/4" CLEAN STONE CONFORMING TO COARSE AGGREGATE SIZE #67 OF THE NJDOT SPECIFICATIONS △3
12"
VARIES
VERTICAL TRENCH WALLS TO 24" MIN. ABOVE TOP OF PIPE.
INVERT
SEE FOUNDATION REQUIREMENTS.
6"

TRENCH

DETAIL K – N.T.S

NOTES :

1. IF CONTRACTOR INCREASES TRENCH WIDTH, HE IS TO RECOMPUTE & SUBMIT FOR APPROVAL BY THE ENGINEER ALL PIPE CLASSES. ANY ADDITIONAL COST NECESSITATED BY THE INCREASE IN TRENCH WIDTH IS TO BE BORNE BY THE CONTRACTOR.
2. IN PAVED AREAS, WIDTH OF PAVEMENT TO BE REMOVED SHALL BE EXTENDED 12" BEYOND EDGE OF TRENCH.
3. ALL EXCAVATION, TRENCHING, SHEETING AND BRACING SHALL CONFORM TO THE REQUIREMENTS OF THE "CONSTRUCTION SAFETY CODE OF THE BUREAU OF ENGINEERING AND SAFETY OF THE NEW JERSEY DEPARTMENT OF LABOR AND INDUSTRY.
4. SLOPE OF THE TRENCH SHALL NOT EXCEED O.S.H.A. REQUIREMENTS WHERE SUCH SLOPE WILL CAUSE TOP WIDTH OF TRENCH TO PROTRUDE BEYOND THE ACQUIRED EASEMENT (PERMANENT PLUS TEMPORARY) THE CONTRACTOR SHALL USE SHEETING.
5. NO SEWER SHALL BE DESIGNED WITH LESS THAN 4FT. OF COVER WITHOUT SPECIAL PERMISSION OF FTSA.
6. △4 PROVIDE AT LEAST ONE IMPERVIOUS PIPE TRENCH DAM IN BEDDING BETWEEN EACH MANHOLE OR EVERY 300 FT, WHICHEVER IS LESS (SEE DETAIL THIS SHEET)

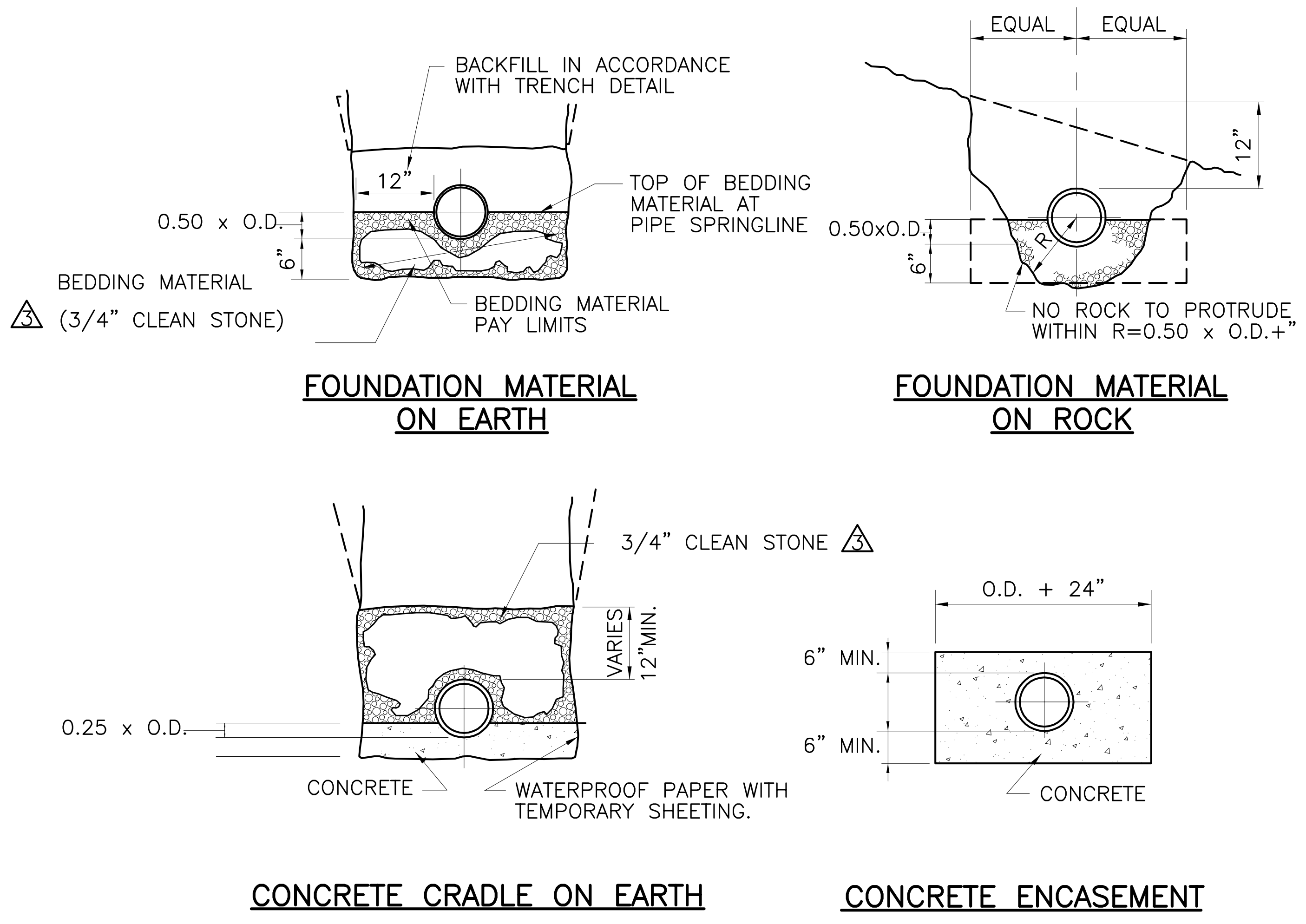
BACKFILL IN ACCORDANCE WITH TRENCH DETAIL
12"
TOP OF BEDDING MATERIAL AT PIPE SPRINGLINE
0.50 x O.D.
6"
BEDDING MATERIAL △3 (3/4" CLEAN STONE)
BEDDING MATERIAL PAY LIMITS
EQUAL
EQUAL
12"
0.50xO.D.
6"
R
NO ROCK TO PROTRUDE WITHIN R=0.50 x O.D.+"
3/4" CLEAN STONE △3
VARIES 12"MIN.
0.25 x O.D.
CONCRETE
WATERPROOF PAPER WITH TEMPORARY SHEETING.
O.D. + 24"
6" MIN.
6" MIN.
CONCRETE

FOUNDATION MATERIAL ON EARTH

FOUNDATION MATERIAL ON ROCK

CONCRETE CRADLE ON EARTH

CONCRETE ENCASEMENT

FOUDATION REQUIREMENTS

DETAIL D – N.T.S

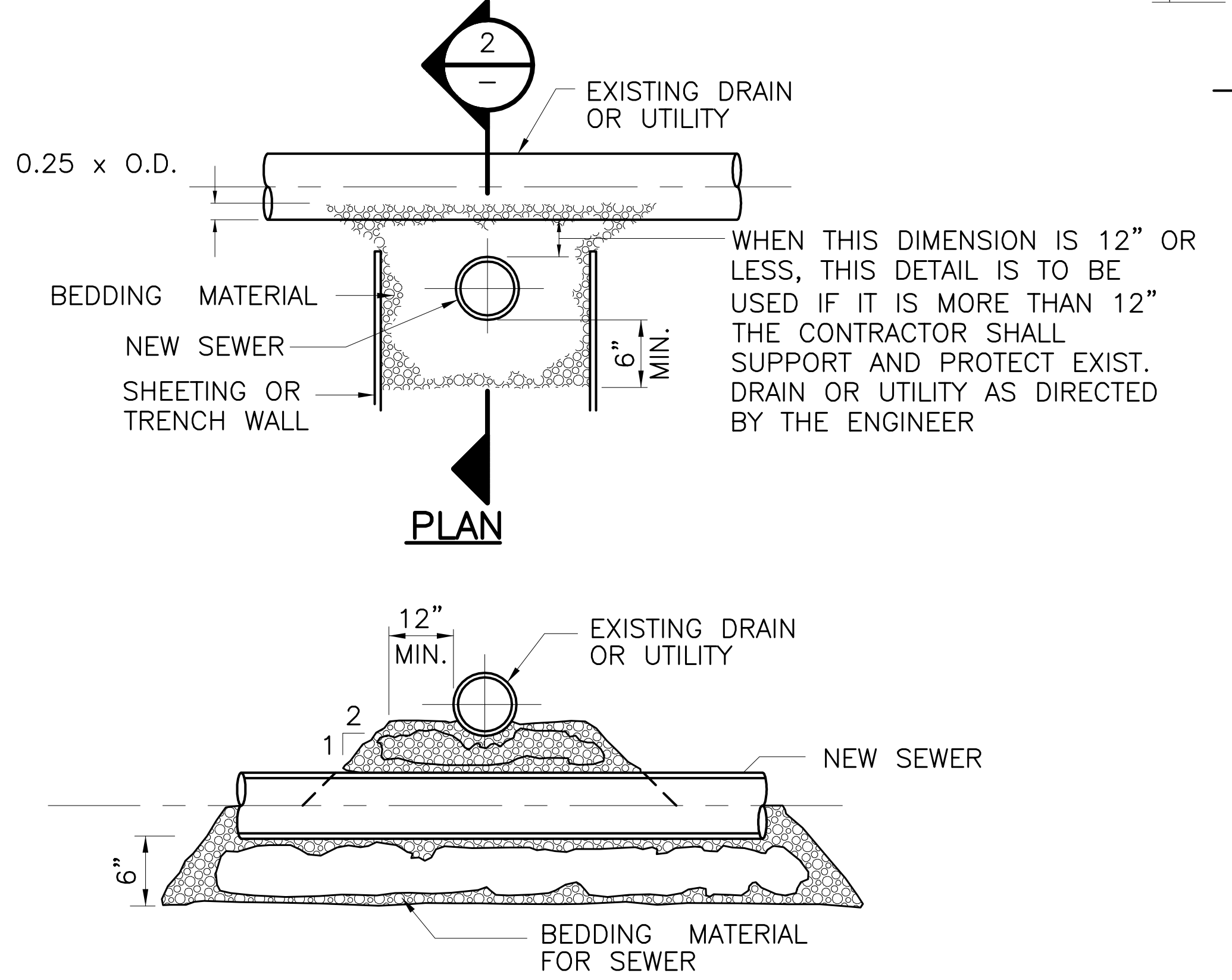
2 –
EXISTING DRAIN OR UTILITY
0.25 x O.D.
WHEN THIS DIMENSION IS 12" OR LESS, THIS DETAIL IS TO BE USED IF IT IS MORE THAN 12" THE CONTRACTOR SHALL SUPPORT AND PROTECT EXIST. DRAIN OR UTILITY AS DIRECTED BY THE ENGINEER
BEDDING MATERIAL
NEW SEWER
SHEETING OR TRENCH WALL
6" MIN.
PLAN
12" MIN.
EXISTING DRAIN OR UTILITY
2
1
NEW SEWER
6"
BEDDING MATERIAL FOR SEWER

SECTION 2

SEWER CROSSING BELOW EXISTING DRAIN OR UTILITY

DETAIL H – N.T.S

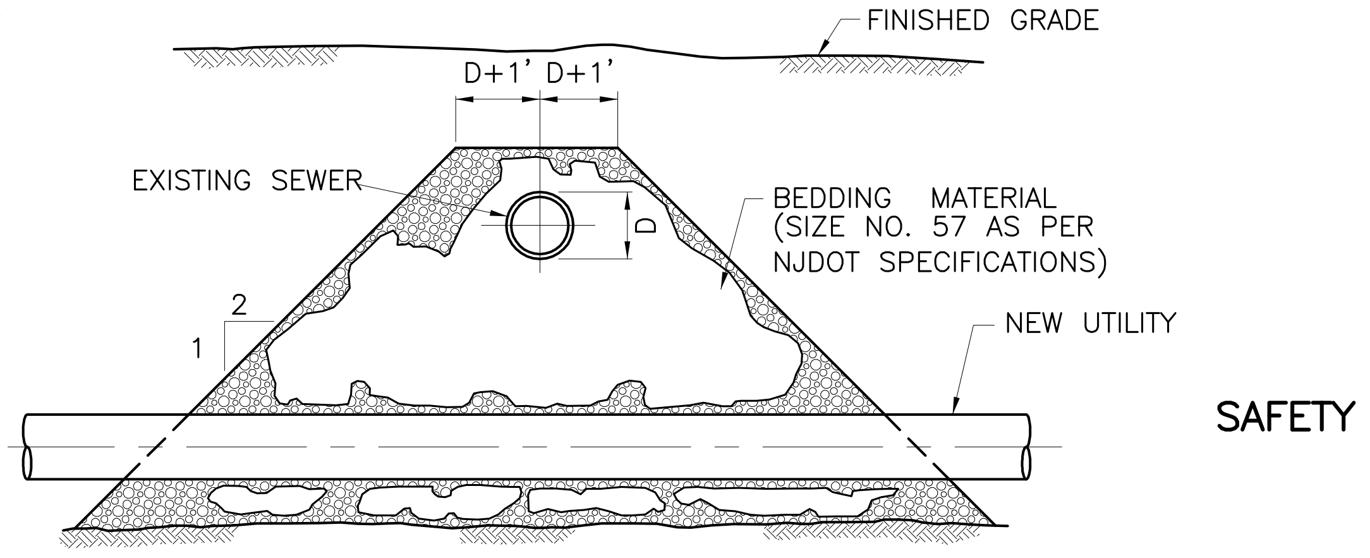
FINISHED GRADE
D+1' D+1'
EXISTING SEWER
D
BEDDING MATERIAL (SIZE NO. 57 AS PER NJDOT SPECIFICATIONS)
2
1
NEW UTILITY

UTILITY CROSSING BELOW EXISTING SEWER

DETAIL L – N.T.S

NOTE :

ALL MATERIAL REMOVED FROM BENEATH ANY EXISTING SEWER SHALL BE REPLACED WITH CONCRETE OR CLEAN CRUSHED STONE. IF THE VOID UNDER THE SEWER IS LESS THAN 12" THEN ONLY CONCRETE SHALL BE USED.

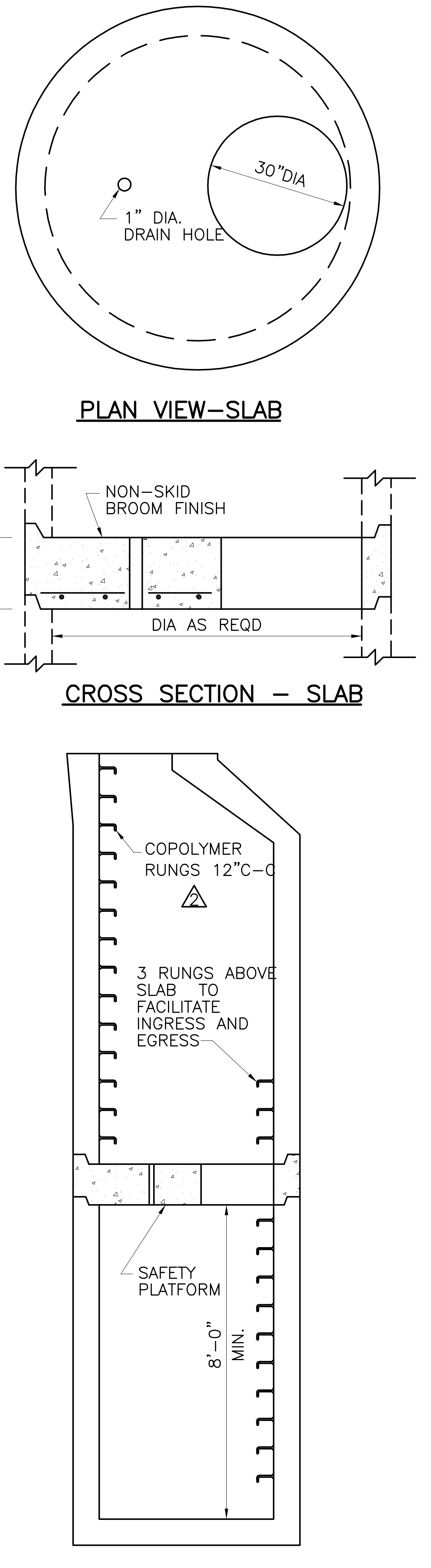
30"DIA
1" DIA. DRAIN HOLE
PLAN VIEW-SLAB
NON-SKID BROOM FINISH
12"
DIA AS REQD
CROSS SECTION – SLAB
COPOLYMER RUNGS 12"C-C △2
3 RUNGS ABOVE SLAB TO FACILITATE INGRESS AND EGRESS
SAFETY PLATFORM
8'-0" MIN.

MH CROSS SECTION

SAFETY PLATFORM FOR DEEP MANHOLES

DETAIL M – N.T.S

NOTE :

WHEN DEPTH OF MH FROM TOP OF FRAME AND COVER TO INVERT EXCEEDS 15'-0" THIS DETAIL IS TO BE USED.

△3 NOTE: ALL WORK SHALL COMPLY WITH THE REVISION OF THE "RATES, RULES & REGULATIONS APPLICABLE TO SEWER SERVICE IN THE TOWNSHIP OF FRANKLIN, SOMERSET COUNTY, NEW JERSEY" IN EFFECT AT THE TIME CONSTRUCTION BEGINS.

REV. NO.	DATE	DRWN	CHKD	REMARKS
△4	10/13	CDM	FTSA	REVISIONS TO UPDATE RATES, RULES AND REGULATIONS
△3	5/00	CDM	FTSA	PIPE BEDDING & GENERAL NOTE
△2	2/98	CDM	FTSA	LATERAL RUNGS
△1	5/97	CDM	FTSA	MANHOLE COATINGS, ENCAPSULATION SYSTEM, BEDDING

DESIGNED BY: H. MATTESON
DRAWN BY: D. GARVEY
SHEET CHK'D BY: X
CROSS CHK'D BY: X
APPROVED BY: X
DATE: OCTOBER 2013

CDM Smith

CDM Smith Inc.
110 Fieldcrest Avenue, #8, 6th Floor
Edison, NJ 08837
Tel: (732) 225-7000

FRANKLIN TOWNSHIP SEWERAGE AUTHORITY
SOMERSET COUNTY, NEW JERSEY

STANDARD DETAILS II

PROJECT NO. 105979-89351
FILE NAME: CSTDI002
SHEET NO. 2 OF 3

XREFs: [CDMS_2436] Images: []
Last saved by: GENCORELLIRJ Time: 10/7/2014 1:57:42 PM
pw:\\dacpwapp1:PW_XM1\5399\99168\03 Reports and Studies\09 CADD Figures and Graphics\CSTDI002.dwg

© 2013 CDM SMITH ALL RIGHTS RESERVED.
REUSE OF DOCUMENTS: THESE DOCUMENTS AND DESIGNS PROVIDED BY PROFESSIONAL SERVICE, INCORPORATED HEREIN, ARE THE PROPERTY OF CDM SMITH AND ARE NOT TO BE USED, IN WHOLE OR PART, FOR ANY OTHER PROJECT WITHOUT THE WRITTEN AUTHORIZATION OF CDM SMITH.

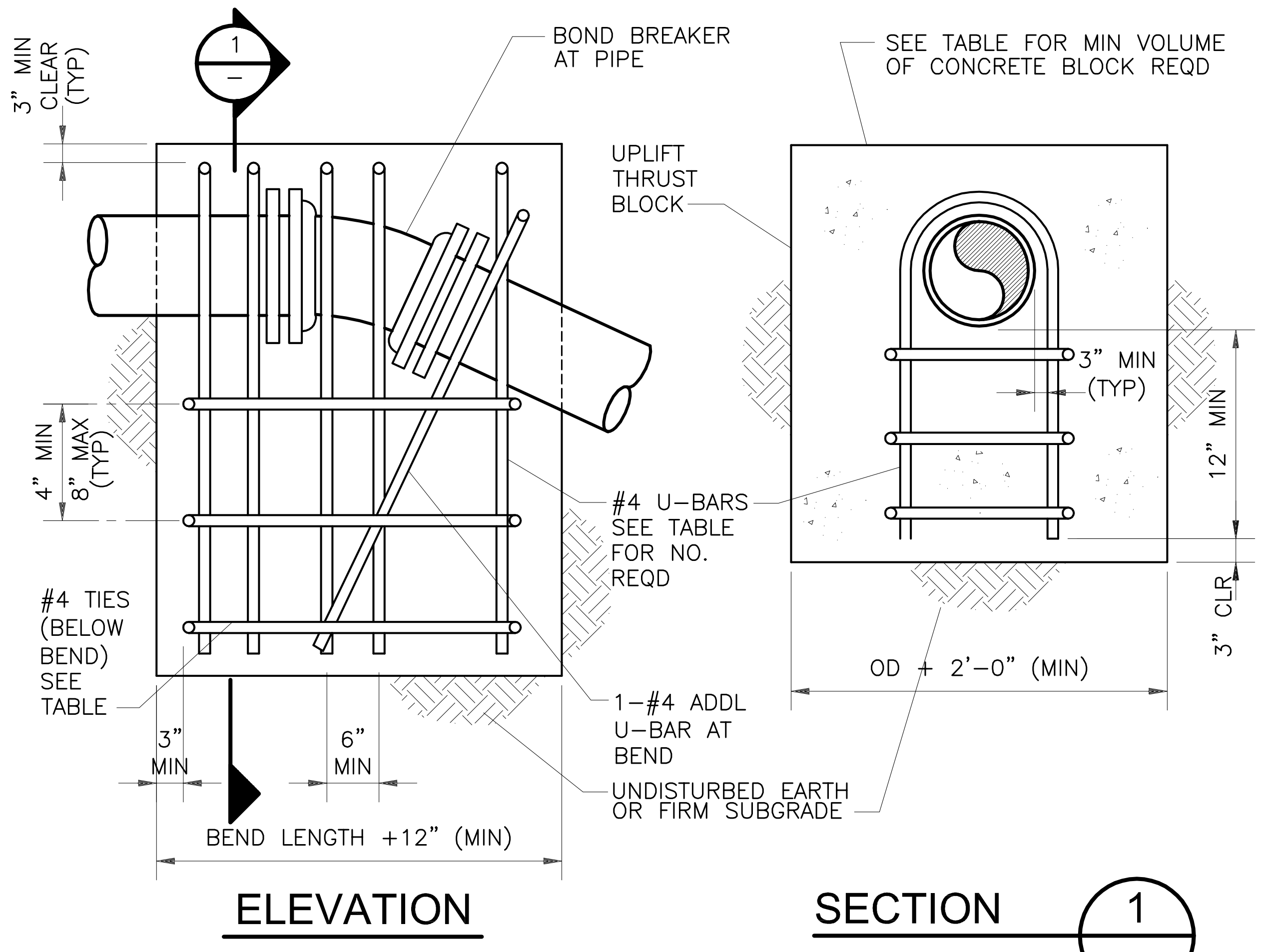
1
3" MIN CLEAR (TYP)
BOND BREAKER AT PIPE
UPLIFT THRUST BLOCK
SEE TABLE FOR MIN VOLUME OF CONCRETE BLOCK REQD
4" MIN 8" MAX (TYP)
#4 U-BARS SEE TABLE FOR NO. REQD
3" MIN (TYP)
12" MIN
#4 TIES (BELOW BEND) SEE TABLE
3" CLR
1-#4 ADDL U-BAR AT BEND
OD + 2'-0" (MIN)
3" MIN
6" MIN
UNDISTURBED EARTH OR FIRM SUBGRADE
BEND LENGTH +12" (MIN)
ELEVATION
SECTION 1

PIPE SIZE (IN.)	PIPE O.D. (IN.)	60 DEG		45 DEG		30 DEG		22.5 DEG		#4 TIES REQD
		REINF	CONC	REINF	CONC	REINF	CONC	REINF	CONC	
3	3.96	2	1	2	0.5	2	0.5	2	0.5	2
4	4.80	2	1	2	1.0	2	0.5	2	0.5	2
6	6.90	2	2	2	1.5	2	1.0	2	1.0	2
8	9.05	2	3.5	2	3	2	2	2	1.5	2
10	11.10	2	5	2	4	2	3	2	2.0	2
12	13.20	3	7	3	6	2	4	2	3	2
14	15.30	4	9	4	7	3	5	2	4	4
16	17.40	6	12	5	10	3	7	3	5	4
18	19.50	7	15	6	12	4	9	3	7	4

NOTES:

1. "REINF" = NO. OF #4-U-BARS REQUIRED.
2. "CONCRETE" = VOLUME OF CONCRETE BLOCK REQUIRED, CU YD.
3. MAXIMUM TEST PRESSURE = 1.50x1.50 PSI.
4. MINIMUM GRADE 40 REBAR.

THRUST BLOCK FOR UPPER VERTICAL BENDS WITH REINFORCING BARS

DETAIL A
N.T.S.

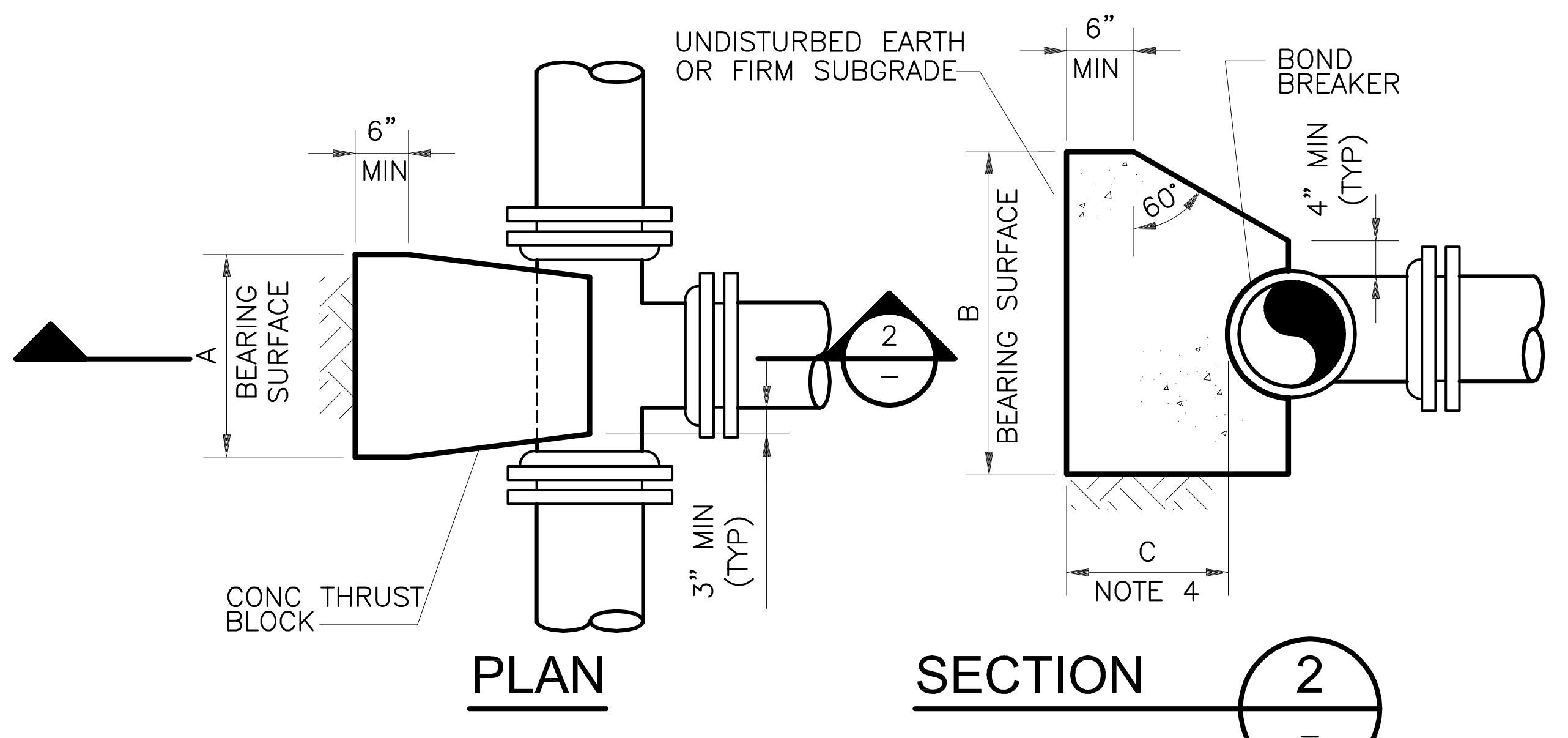
6" MIN
UNDISTURBED EARTH OR FIRM SUBGRADE
6" MIN
BOND BREAKER
4" MIN (TYP)
A
BEARING SURFACE
B
BEARING SURFACE
60°
2
3" MIN (TYP)
CONC THRUST BLOCK
C
NOTE 4
PLAN
SECTION 2

DETAIL FOR TEES

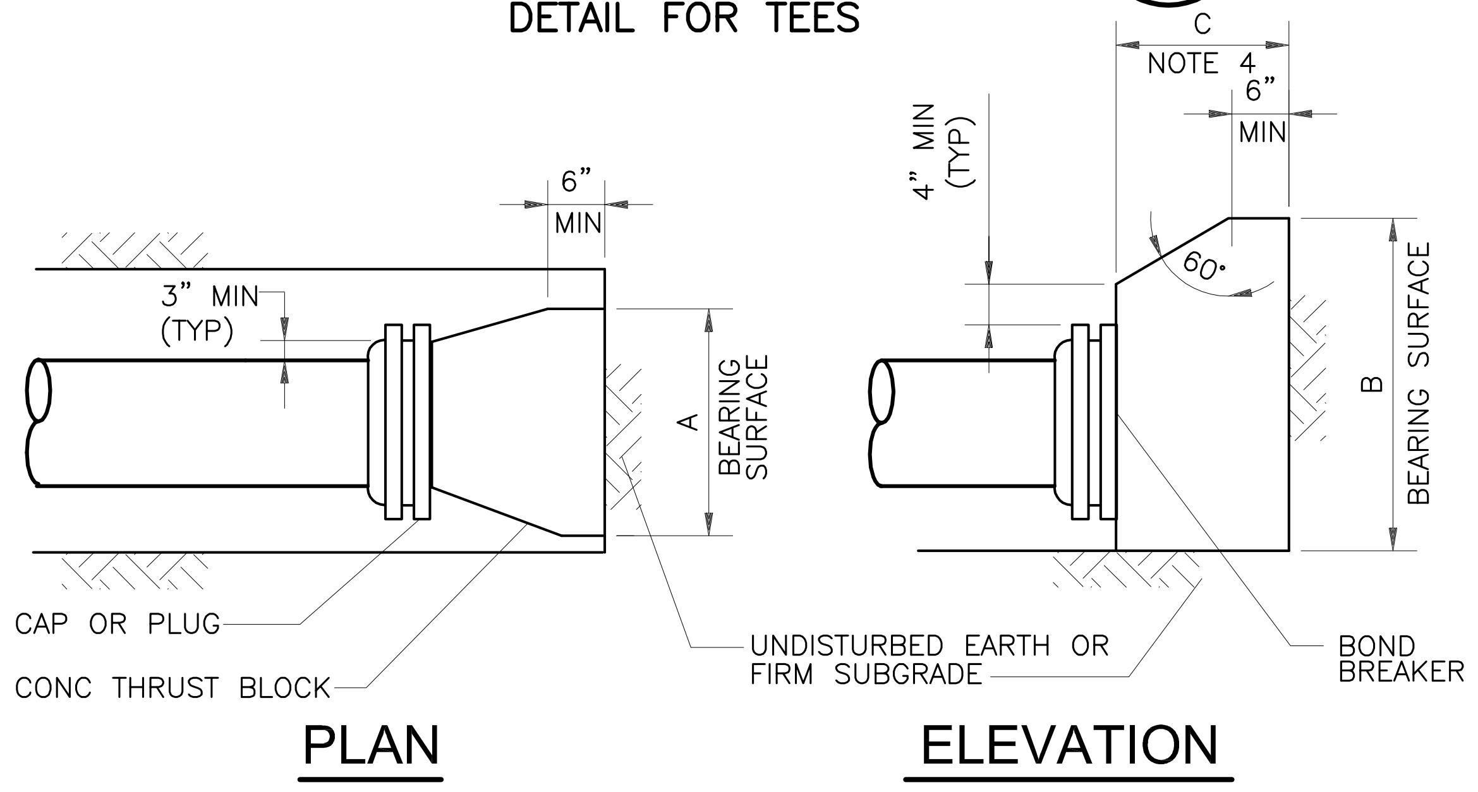
C
NOTE 4
6" MIN
4" MIN (TYP)
6" MIN
3" MIN (TYP)
60°
A
BEARING SURFACE
B
BEARING SURFACE
CAP OR PLUG
CONC THRUST BLOCK
UNDISTURBED EARTH OR FIRM SUBGRADE
BOND BREAKER
PLAN
ELEVATION

DETAIL FOR CAPS OR PLUGS

NOMINAL PIPE SIZE (IN)	MAXIMUM PIPE OD (IN)	REQUIRED BEARING AREA (SQ FT)
3	3.96	1.4
4	4.80	2.0
6	6.90	4
8	9.05	7
10	11.10	11
12	13.20	15
14	15.30	21
16	17.40	27
18	19.50	34
20	21.60	41
24	25.80	59
30	32.00	90
36	38.30	130

NOTES:

1. MAXIMUM TEST PRESURE = 1.50x150 PSI
2. MINIMUM ALLOWABLE SOIL BEARING PRESSURE = 2000 PSF
3. BEARING AREA = A x B
4. C SHALL BE GREATER THAN A/2 AND B/2.

THRUST BLOCK FOR TEES, CAPS AND PLUGS

DETAIL B
N.T.S.

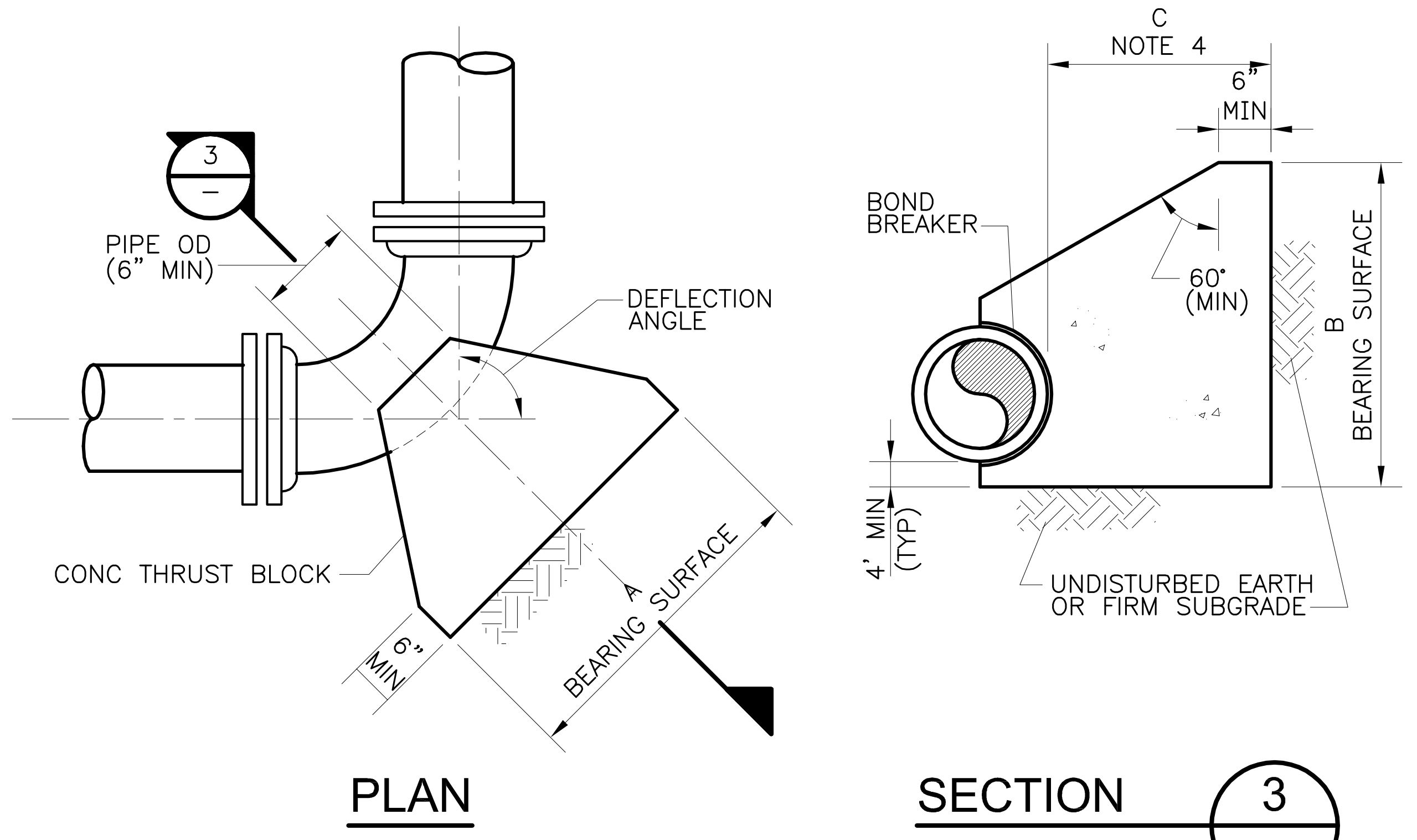
3
PIPE OD (6" MIN)
DEFLECTION ANGLE
CONC THRUST BLOCK
6" MIN
A
BEARING SURFACE
C
NOTE 4
6" MIN
BOND BREAKER
60° (MIN)
B
BEARING SURFACE
4" MIN (TYP)
UNDISTURBED EARTH OR FIRM SUBGRADE
PLAN
SECTION 3

DETAIL FOR HORIZONTAL BENDS

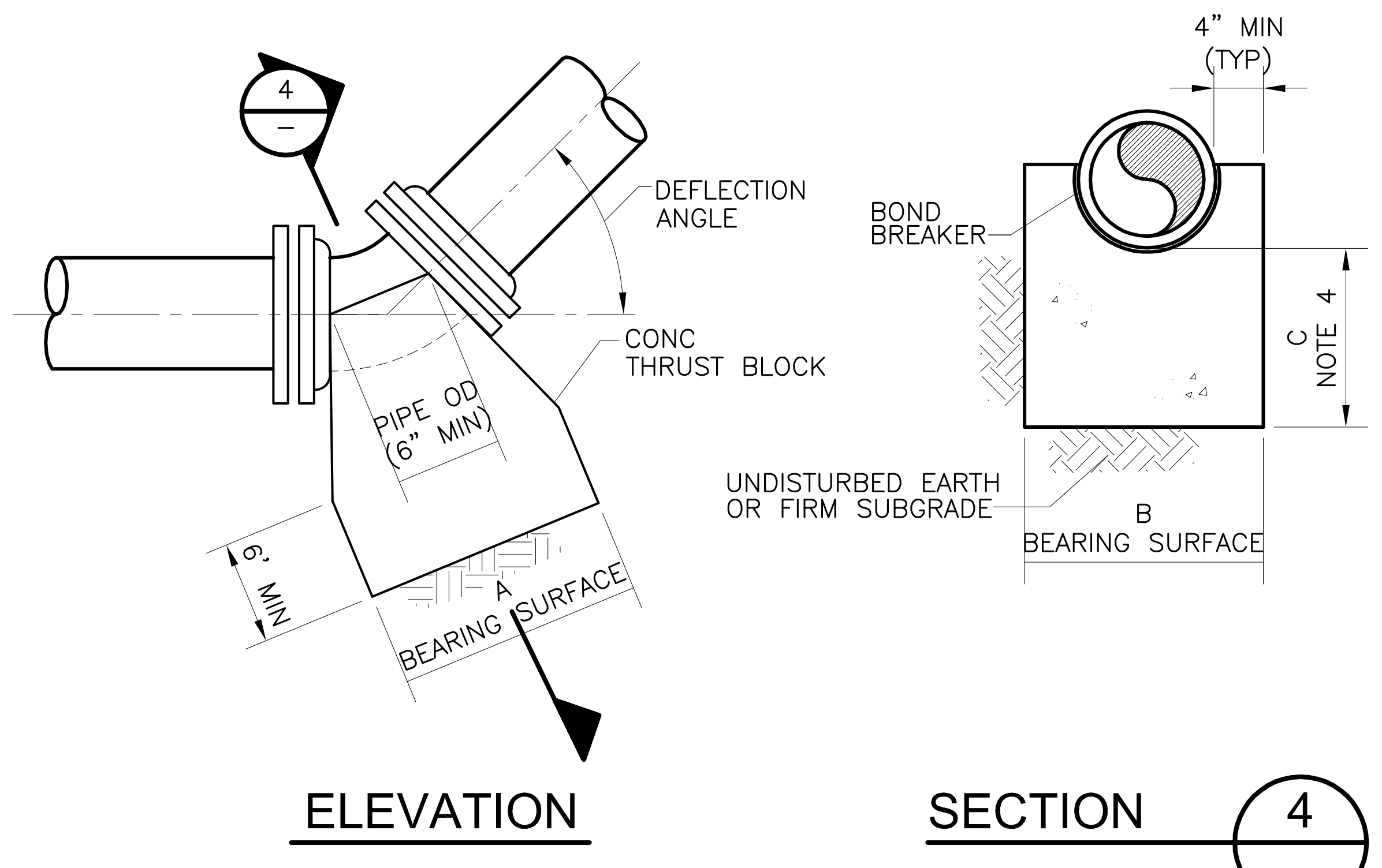
4
DEFLECTION ANGLE
CONC THRUST BLOCK
PIPE OD (6" MIN)
6" MIN
A
BEARING SURFACE
4" MIN (TYP)
BOND BREAKER
C
NOTE 4
UNDISTURBED EARTH OR FIRM SUBGRADE
B
BEARING SURFACE
ELEVATION
SECTION 4

DETAIL FOR LOWER VERTICAL BENDS

NOMINAL PIPE SIZE (INCHES)	MAXIMUM PIPE OD (INCHES)	REQUIRED BEARING AREA (SQ FT)					
		90 DEG	60 DEG	45 DEG	30 DEG	22.50 DEG	11.25 DEG
3	3.96	2.0	1.4	1.1	0.7	0.5	0.3
4	4.80	2.9	2.0	1.6	1.1	0.8	0.4
6	6.90	6	4	3	2.2	1.6	0.8
8	9.05	10	7	6	4	3	1.4
10	11.10	15	11	8	6	4	2.1
12	13.20	22	15	12	8	6	3
14	15.30	29	21	16	11	8	4
16	17.40	38	27	20	14	10	5
18	19.50	48	34	26	17	13	7
20	21.60	58	41	32	21	16	8
24	25.80	83	59	45	30	23	12
30	32.00	128	90	69	47	35	18
36	38.30	183	130	99	67	51	25

THRUST BLOCKS FOR HORIZONTAL BENDS AND LOWER VERTICAL BENDS

NOTES:

1. MAXIMUM TEST PRESURE = 1.5 x 150 PSI
2. MINIMUM ALLOWABLE SOIL BEARING PRESSURE = 2000 PSF
3. BEARING AREA = A x B
4. C SHALL BE GREATER THAN A/2 AND B/2.

THRUST BLOCKS FOR HORIZONTAL BENDS AND LOWER VERTICAL BENDS

DETAIL C
N.T.S.

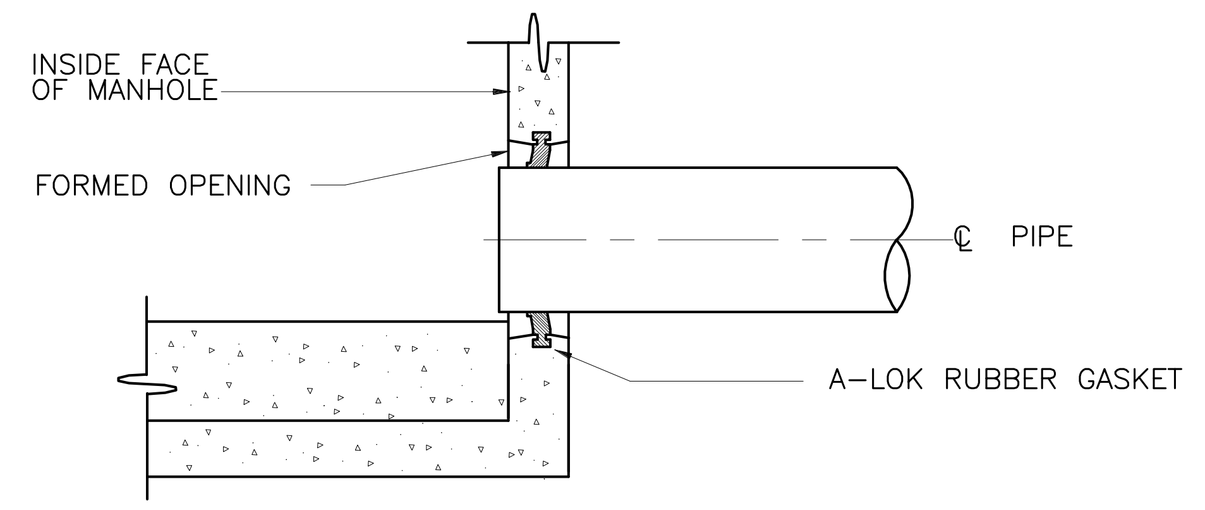
INSIDE FACE OF MANHOLE
FORMED OPENING
℄ PIPE
A-LOK RUBBER GASKET

A-LOK SYSTEM

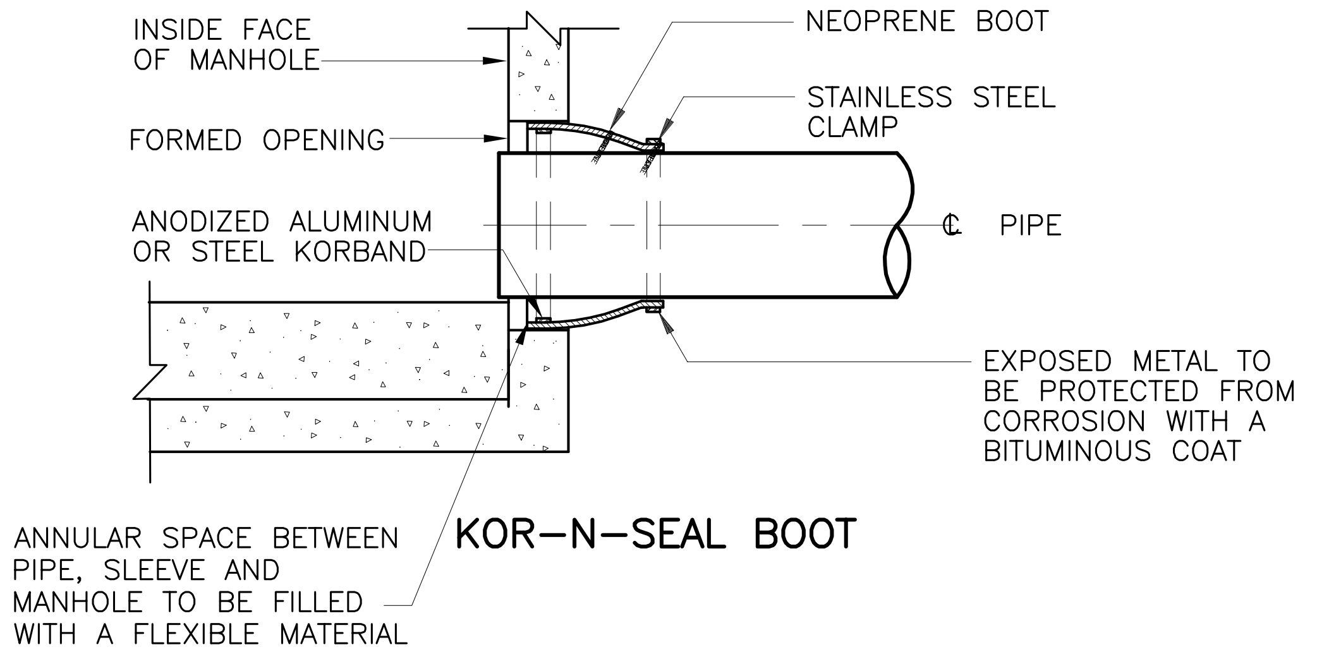
INSIDE FACE OF MANHOLE
NEOPRENE BOOT
STAINLESS STEEL CLAMP
FORMED OPENING
ANODIZED ALUMINUM OR STEEL KORBAND
℄ PIPE
EXPOSED METAL TO BE PROTECTED FROM CORROSION WITH A BITUMINOUS COAT
ANNULAR SPACE BETWEEN PIPE, SLEEVE AND MANHOLE TO BE FILLED WITH A FLEXIBLE MATERIAL

KOR-N-SEAL BOOT

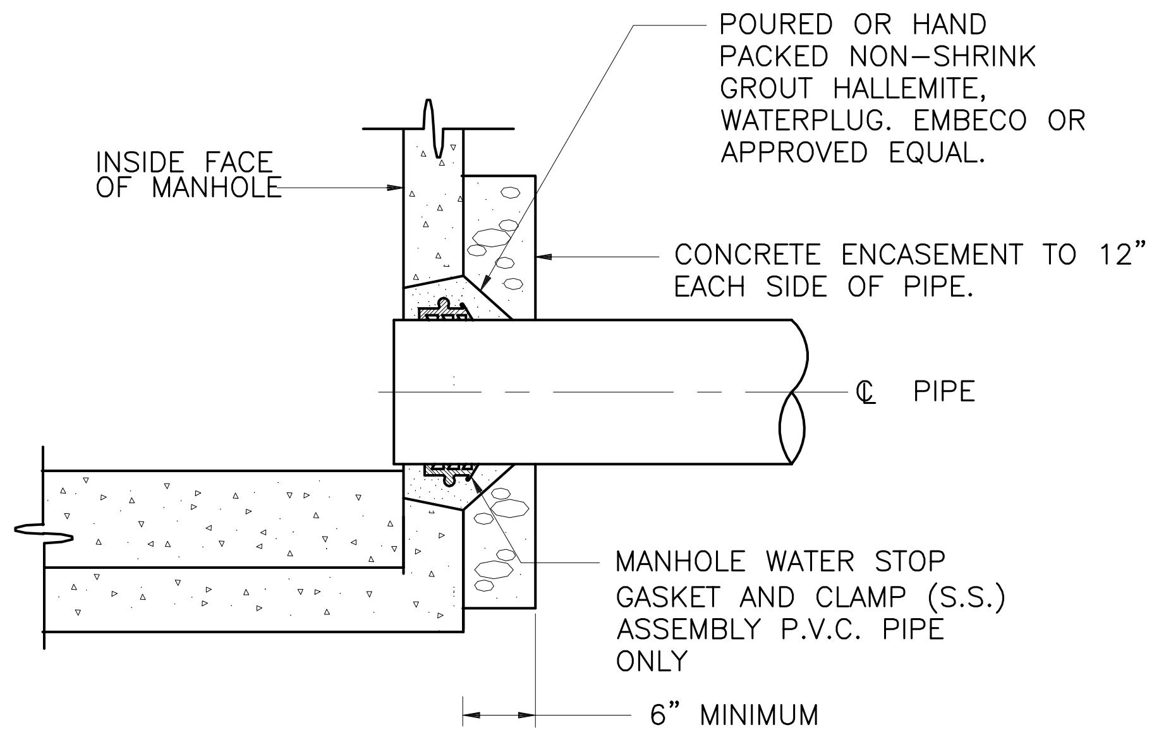
POURED OR HAND PACKED NON-SHRINK GROUT HALLEMITE, WATERPLUG. EMBECO OR APPROVED EQUAL.
INSIDE FACE OF MANHOLE
CONCRETE ENCASEMENT TO 12" EACH SIDE OF PIPE.
℄ PIPE
MANHOLE WATER STOP GASKET AND CLAMP (S.S.) ASSEMBLY P.V.C. PIPE ONLY
6" MINIMUM

CONCRETE ENCASEMENT

PIPE CONNECTIONS I

DETAIL D
N.T.S.

PIPE CONNECTIONS II

DETAIL E
N.T.S.

NOTE: ALL WORK SHALL COMPLY WITH THE REVISION OF THE "RATES, RULES & REGULATIONS APPLICABLE TO SEWER SERVICE IN THE TOWNSHIP OF FRANKLIN, SOMERSET COUNTY, NEW JERSEY" IN EFFECT AT THE TIME CONSTRUCTION BEGINS.

REV. NO.	DATE	DRWN	CHKD	REMARKS

DESIGNED BY: H. MATTESON
DRAWN BY: D. GARVEY
SHEET CHK'D BY: X
CROSS CHK'D BY: X
APPROVED BY: X
DATE: OCTOBER 2013

CDM Smith
CDM Smith Inc.
110 Fieldcrest Avenue, #8, 6th Floor
Edison, NJ 08837
Tel: (732) 225-7000

FRANKLIN TOWNSHIP SEWERAGE AUTHORITY
SOMERSET COUNTY, NEW JERSEY

STANDARD DETAILS III

PROJECT NO. 105979-89351
FILE NAME: CSTDI003
SHEET NO.
3 OF 3

XREFs: [CDMS_2436] Images: []
Last saved by: GENCORELLIRJ Time: 10/7/2014 1:57:22 PM
pw:\\dacpwapp1:PW_XM1\5399\99168\03 Reports and Studies\09 CADD Figures and Graphics\CSTDI003.dwg

© 2013 CDM SMITH ALL RIGHTS RESERVED.
REUSE OF DOCUMENTS: THESE DOCUMENTS AND DESIGNS PROVIDED BY PROFESSIONAL SERVICE, INCORPORATED HEREIN, ARE THE PROPERTY OF CDM SMITH AND ARE NOT TO BE USED, IN WHOLE OR PART, FOR ANY OTHER PROJECT WITHOUT THE WRITTEN AUTHORIZATION OF CDM SMITH.